DM13-01.01.12en

NEOLA Inverter SERIES

Service Manual 2013

MS11D-09HRDN1 / MO11D-09HRDN1
MS11D-12HRDN1 / MO11D-12HRDN1
MS11D-18HRDN1 / MO11D-18HRDN1
MS11D-24HRDN1 / MO11D-24HRDN1

splitoff.ru

Большая библиотека технической документации
https://splitsystema48.ru/instrukcii-po-ekspluatacii-kondicionerov.html
каталоги, инструкции, сервисные мануалы, схемы.

CONTENTS

1. Precaution 3
1.1 Safety Precaution 3
1.2 Warning 3
2. Function 8
3. Specification 11
4. Dimension 11
4.2 Outdoor Units 17
5. Capacity tables 18
6. Refrigerant Cycle Diagram 21
7. Wiring Diagram 22
7.1 Indoor Units 22
7.2 Outdoor Units 23
8. Installation details 25
8.1 Wrench torque sheet for installation 25
8.2 Connecting the cables 25
8.3 Pipe length and the elevation 25
8.4 Installation for the first time 27
8.5 Adding the refrigerant after running the system for many years 30
8.6 Re-installation while the indoor unit need to be repaired 31
8.7 Re-installation while the outdoor unit need to be repaired 33
9. Operation characteristics 36
CAUTION: 36
10. Electronic function 37
10.1 Abbreviation 37
10.2 Display function 37
10.3 Main Protection 38
10.4 Operation Modes and Functions 39
11. Troubleshooting 51
11.1 Indoor Unit Error Display 51
11.2 Diagnosis and Solution 52

Все каталоги и инструкции здесь: https://splitsystema48.ru/instrukcii-po-ekspluatacii-kondicionerov.html

1. Precaution

1.1 Safety Precaution

- **To prevent injury to the user or other people and property damage, the following instructions must be followed.**
- **Incorrect operation due to ignoring instruction will cause harm or damage.**
- **Before service unit, be sure to read this service manual at first.**

1.2 Warning

➢ Installation

- **Do not use a defective or underrated circuit breaker. Use this appliance on a dedicated circuit.**

There is risk of fire or electric shock.

- **For electrical work, contact the dealer, seller, a qualified electrician, or an Authorized service center.**

Do not disassemble or repair the product, there is risk of fire or electric shock.

- **Always ground the product.**

There is risk of fire or electric shock.

- **Install the panel and the cover of control box securely.**

There is risk of fire of electric shock.

- **Always install a dedicated circuit and breaker.**

Improper wiring or installation may cause fore or electric shock.

- **Use the correctly rated breaker of fuse.**

There is risk of fire or electric shock.

- **Do not modify or extend the power cable.**

There is risk of fire or electric shock.

- **Do not install, remove, or reinstall the unit by yourself(customer).**

There is risk of fire, electric shock, explosion, or injury.

- **Be caution when unpacking and installing the product.**

Sharp edges could cause injury, be especially careful of the case edges and the fins on the condenser and evaporator.

Все каталоги и инструкции здесь: https://splitsystema48.ru/instrukcii-po-ekspluatacii-kondicionerov.html

- **For installation, always contact the dealer or an Authorized service center.**

There is risk of fire, electric shock, explosion, or injury.

- **Do not install the product on a defective installation stand.**

It may cause injury, accident, or damage to the product.

- **Be sure the installation area does not deteriorate with age.**

If the base collapses, the air conditioner could fall with it, causing property damage, product failure, and personal injury.

- **Do not let the air conditioner run for a long time when the humidity is very high and a door or a window is left open.**

Moisture may condense and wet or damage furniture.

- **Take care to ensure that power cable could not be pulled out or damaged during operation.**

There is risk of fire or electric shock.

- **Do not place anything on the power cable.**

There is risk of fire or electric shock.

- **Do not plug or unplug the power supply plug during operation.**

There is risk of fire or electric shock.

- **Do not touch (operation) the product with wet hands.**

There is risk of fire or electric shock.

- **Do not place a heater or other appliance near the power cable.**

There is risk of fire and electric shock.

- **Do not allow water to run into electric parts.**

It may cause fire, failure of the product, or electric shock.

- **Do not store or use flammable gas or combustible near the product.**

There is risk of fire or failure of product.

- **Do not use the product in a tightly closed space for a long time.**

Oxygen deficiency could occur.

- **When flammable gas leaks, turn off the gas and open a window for ventilation before turn the product on.**

Do not use the telephone or turn switches on or off.

There is risk of explosion or fire.

Все каталоги и инструкции здесь: https://splitsystema48.ru/instrukcii-po-ekspluatacii-kondicionerov.html

- **If strange sounds, or small or smoke comes from product. Turn the breaker off or disconnect the power supply cable.**

There is risk of electric shock or fire.

- **Stop operation and close the window in storm or hurricane. If possible, remove the product from the window before the hurricane arrives.**

There is risk of property damage, failure of product, or electric shock.

- **Do not open the inlet grill of the product during operation. (Do not touch the electrostatic filter, if the unit is so equipped.)**

There is risk of physical injury, electric shock, or product failure.

- **When the product is soaked (flooded or submerged), contact an Authorized service center.**

There is risk of fire or electric shock.

- **Be caution that water could not enter the product.**

There is risk of fire, electric shock, or product damage.

- **Ventilate the product from time to time when operating it together with a stove, etc.**

There is risk of fire or electric shock.

- **Turn the main power off when cleaning or maintaining the product.**

There is risk of electric shock.

- **When the product is not be used for a long time, disconnect the power supply plug or turn off the breaker.**

There is risk of product damage or failure, or unintended operation.

- **Take care to ensure that nobody could step on or fall onto the outdoor unit.**

This could result in personal injury and product damage.

➢ CAUTION

- **Always check for gas (refrigerant) leakage after installation or repair of product.**

Low refrigerant levels may cause failure of product.

- **Install the drain hose to ensure that water is drained away properly.**

A bad connection may cause water leakage.

- **Keep level even when installing the product.**

It can avoid vibration of water leakage.

Все каталоги и инструкции здесь: https://splitsystema48.ru/instrukcii-po-ekspluatacii-kondicionerov.html

- **Do not install the product where the noise or hot air from the outdoor unit could damage the neighborhoods.**

It may cause a problem for your neighbors.

- **Use two or more people to lift and transport the product.**

Avoid personal injury.

- **Do not install the product where it will be exposed to sea wind (salt spray) directly.**

It may cause corrosion on the product. Corrosion, particularly on the condenser and evaporator fins, could cause product malfunction or inefficient operation.

➢ Operational

- **Do not expose the skin directly to cool air for long periods of time. (Do not sit in the draft).**

This could harm to your health.

- **Do not use the product for special purposes, such as preserving foods, works of art, etc. It is a consumer air conditioner, not a precision refrigerant system.**

There is risk of damage or loss of property.

- **Do not block the inlet or outlet of air flow.**

It may cause product failure.

- **Use a soft cloth to clean. Do not use harsh detergents, solvents, etc.**

There is risk of fire, electric shock, or damage to the plastic parts of the product.

- **Do not touch the metal parts of the product when removing the air filter. They are very sharp.**

There is risk of personal injury.

- **Do not step on or put anything on the product. (outdoor units)**

There is risk of personal injury and failure of product.

- **Always insert the filter securely. Clean the filter every two weeks or more often if necessary.**

A dirty filter reduces the efficiency of the air conditioner and could cause product malfunction or damage.

- **Do not insert hands or other object through air inlet or outlet while the product is operated.**

Все каталоги и инструкции здесь: https://splitsystema48.ru/instrukcii-po-ekspluatacii-kondicionerov.html

There are sharp and moving parts that could cause personal injury.

- **Do not drink the water drained from the product.**

It is not sanitary could cause serious health issues.

- **Use a firm stool or ladder when cleaning or maintaining the product.**

Be careful and avoid personal injury.

- **Replace the all batteries in the remote control with new ones of the same type. Do not mix old and mew batteries or different types of batteries.**

There is risk of fire or explosion.

- **Do not recharge or disassemble the batteries. Do not dispose of batteries in a fire.**

They may burn of explode.

- **If the liquid from the batteries gets onto your skin or clothes, wash it well with clean water. Do not use the remote of the batteries have leaked.**

The chemical in batteries could cause burns or other health hazards

Все каталоги и инструкции здесь: https://splitsystema48.ru/instrukcii-po-ekspluatacii-kondicionerov.html

2. Function

Model Names of Indoor/Outdoor Units

Series	Capacity	Indoor units	Outdoor units
Inverter	9k	MS11D-09HRDN1	MO11D-09HRDN1
	12k	MS11D-12HRDN1	MO11D-12HRDN1
	18k	MS11D-18HRDN1	MO11D-18HRDN1
	24k	MS11D-24HRDN1	MO11D-24HRDN1

The designs and information in this book are subject to change without notice for product improvement.

Все каталоги и инструкции здесь: https://splitsystema48.ru/instrukcii-po-ekspluatacii-kondicionerov.html

Indoor units

- **Operation by remote controller**
- **Sensing by room temperature**

  Room temperature sensor.
  Pipe temperature sensor.
- **Room temperature control**

  Maintain the room temperature in accordance with the setting temperature.
- **Anti-freezing control in cooling**

  Prevent the water being frozen on evaporator by sensing the evaporator pipe temperature in cooling mode
- **Time Delay Safety control**
- **Indoor fan speed control**

  High, med, low.
- **Sleep mode auto control**
- **Independent dehumidification**

  The function is usually used in rainy days in springtime or damp areas.
- **Air flow Direction control**

  The louver can be set at the desired position or swing up and down automatically
- **Auto mode**

  The mode can be change by the room temperature.
- **Timer function**
- **Self-diag. function**
- **Auto-restart function**
- **Refrigerant leak detection**

Все каталоги и инструкции здесь: https://splitsystema48.ru/instrukcii-po-ekspluatacii-kondicionerov.html

Outdoor units

Power relay control

Low noise air flow system

Anti-rust cabinet

Made from electrolytic zinc steel sheet and anti-rust coated components.

Valve protection cover

It protects the valves and prevents water from dripping.

Все каталоги и инструкции здесь: https://splitsystema48.ru/instrukcii-po-ekspluatacii-kondicionerov.html

3. Specification

Indoor			MS11D-09HRDN1	MS11D-12HRDN1
Outdoor			MO11D-09HDN1	MO11D-12HDN1
Power supply		Ph-V-Hz	220-240V~ 50Hz, 1Ph	220-240V~ 50Hz, 1Ph
Cooling	Capacity	Btu/h	9000(2250~10500)	12000(2450~14500)
		kW	2,64 (0,66~3,08)	3,52 (0,72~4,25)
	Input	W	815(180~1100)	1090(210~1380)
	Rated current	A	3.6(0.9~4.8)	4.8(1.0~6.2)
	EER	W/W	3.21	3.22
Heating	Capacity	Btu/h	10000(2300~11500)	13500(2800~17000)
		kW	2,93 (0,67~3,37)	3,96 (0,82~4,98)
	Input	W	810(170~1050)	1090(210~1480)
	Rated current	A	3.6(0.8~4.6)	4.9(1.0~6.6)
	COP	W/W	3.62	3.63
Moisture Removal		L/h	1.0	1.2
Max. input consumption		W	1695	2040
Max. current		A	7.7	9.4
Starting current		A	----	----
Compressor	Model		DA108X1C-23EZ	DA108X1C-23EZ
	Type		ROTARY	ROTARY
	Brand		TOSHIBA	TOSHIBA
	Capacity	Btu/h	11021	11021
	Input	W	855	855
	Rated current(RLA)	A	4.95	4.95
	Locked rotor Amp(LRA)	A	----	----
	Thermal protector		----	----
	Thermal protector position		----	----
	Capacitor	uF	6.0	6.0
	Refrigerant oil/oil charge	ml	ESTER OIL VG74 480ml	ESTER OIL VG74 480ml
Indoor fan motor	Model		RPG13H	RPG20D
	Brand		Welling	Welling
	Input	W	34	43.3
	Capacitor	uF	1.2	1.5
	Speed(Hi/Mi/Lo)	r/min	1100/900/800	1200/1050/800
Indoor coil	a.Number of rows		1/2	1/2
	b.Tube pitch(a)x row pitch(b)	mm	20x11.28	21x13.37
	c.Fin spacing	mm	1.3/1.4	1.2/1.3
	d.Fin type (code)		Hydrophilic aluminium	Hydrophilic aluminium
	e.Tube outside dia.and type	mm	φ6,innergroove tube	Φ7,innergroove tube

Все каталоги и инструкции здесь: https://splitsystema48.ru/instrukcii-po-ekspluatacii-kondicionerov.html

	f.Coil length x height x width	mm	510x80x11.28 +510x180x22.56	600x84x13.37 +600x189x26.74
	g.Number of circuits		2	2
Indoor air flow (Hi/Mi/Lo)		m3/h	530/430/390	630/550/420
Indoor noise level (Hi/Mi/Lo)		dB(A)	36/30/28	38/35/28
Indoor unit	Dimension (W*D*H)	mm	680x178x255	770x188x255
	Packing (W*D*H)	mm	745x255x330	835x265x330
	Net/Gross weight	Kg	7 / 8	7.5 / 9.5
Outdoor fan motor	Model		YDK24-6K	YDK24-6G
	Brand		Welling	Welling
	Input	W	63/49	67/48
	Capacitor	uF	2.5	2.5
	Speed	r/min	815 / -- / 590	800/550
Outdoor coil	a.Number of rows		1	1
	b.Tube pitch(a)x row pitch(b)	mm	21x13.37	21x13.37
	c.Fin spacing	mm	1.4	1.4
	d.Fin type (code)		Hydrophilic aluminium	Hydrophilic aluminium
	e.Tube outside dia.and type	mm	Φ7,innergroove tube	Φ7,innergroove tube
	f.Coil length x height x width	mm	694x504x13.37	755x504x13.37
	g.Number of circuits		2	2
Outdoor air flow		m3/h	1650	1800
Outdoor noise level		dB(A)	56	56
Outdoor unit	Dimension(W*D*H)	mm	700x240x540	780x250x540
	Packing (W*D*H)	mm	815x325x580	910x335x585
	Net/Gross weight	Kg	26.5 / 28	28 / 30
Refrigerant type		g	R410A/670g	R410A/760g
Design pressure		MPa	4.2/1.5	4.2/1.5
Refrigerant piping	Liquid side/ Gas side	mm(inch)	Φ6.35/Φ9.52(1/4"/3/8")	Φ6.35/Φ9.52(1/4"/3/8")
	Max. refrigerant pipe length	m	20	20
	Max. difference in level	m	8	8
Connection wiring			1.5(Optional)	1.5(Optional)
Plug type			1.5 / VDE	1.5 / VDE
Thermostat type			Remote Control	Remote Control
Operation temp		℃	17-30	17-30
Ambient temp (cooling/heating)		℃	0-50/-15-30	0-50/-15-30
Application area		m2	13-22	16-27

Все каталоги и инструкции здесь: https://splitsystema48.ru/instrukcii-po-ekspluatacii-kondicionerov.html

Indoor			MS11D-18HRDN1	MS11D-24HRDN1
Outdoor			MO11D-18HDN1	MO11D-24HRDN1
Power supply		Ph-V-Hz	220-240V~ 50Hz, 1Ph	220-240V~ 50Hz, 1Ph
Cooling	Capacity	Btu/h	18000(5100~23000)	24000(12000~25000)
		kW	5,28 (1,49~6,74)	7,03 (3,52~7,33)
	Input	W	1640(380~2000)	2190(820~2500)
	Rated current	A	7.3(1.8~10.2)	9.8(3.6~11.2)
	EER	W/W	3.21	3.21
Heating	Capacity	Btu/h	18000(5300~24000)	25000(11000~27000)
		kW	5,28 (1,55~7,04)	7,33 (3,22~7,91)
	Input	W	1460(350~2000)	2030(800~2700)
	Rated current	A	6.6(1.6~9.0)	8.9(3.5~12.0)
	COP	W/W	3.61	3.61
Moisture Removal		L/h	1.8	2.5
Max. input consumption		W	2640	3040
Max. current		A	11.9	13.9
Starting current		A	----	----
Compressor	Model		DA130S1C-20FZ	DA150S1C-20FZ
	Type		ROTARY	ROTARY
	Brand		GMCC	GMCC
	Capacity	Btu/h	13170	15286
	Input	W	990	1150
	Rated current(RLA)	A	4.97	9.7
	Locked rotor Amp(LRA)	A	----	----
	Thermal protector		1NT01L-4639 or KSD301	KSD301
	Thermal protector position		----	EXTERNAL
	Capacitor	uF	45	50
	Refrigerant oil/oil charge	ml	ESTER OIL VG74/500	ESTER OIL VG74/500
Indoor fan motor	Model		RPG25	RPG45C
	Brand		Welling	Broad Ocean
	Input	W	55	72
	Capacitor	uF	1.5	3.0
	Speed(Hi/Mi/Lo)	r/min	1250/1100/800	1200/1100/900
Indoor coil	a.Number of rows		1/2	2
	b.Tube pitch(a)x row pitch(b)	mm	21x13.37	21x13.37
	c.Fin spacing	mm	1.2/1.3	1.3
	d.Fin type (code)		Hydrophilic aluminium	Hydrophilic aluminium
	e.Tube outside dia.and type	mm	Φ7,innergroove tube	Φ7,innergroove tube

Все каталоги и инструкции здесь: https://splitsystema48.ru/instrukcii-po-ekspluatacii-kondicionerov.html

	f.Coil length x height x width	mm	720x84x13.37 +720x210x26.74	780x315x26.74
	g.Number of circuits		4	5
Indoor air flow (Hi/Mi/Lo)		m3/h	850/750/550	1200/1100/900
Indoor noise level (Hi/Mi/Lo)		dB(A)	43/39/33	47/45/39
Indoor unit	Dimension (W*D*H)	mm	905x198x275	1030x218x315
	Packing (W*D*H)	mm	970x270x345	1115x395x300
	Net/Gross weight	Kg	9.0 / 11.5	12 / 15
Outdoor fan motor	Model		YDK24-6G	YDK55-6G
	Brand		Welling	Board-ocean
	Input	W	67/48	103/78
	Capacitor	uF	2.5	2.5
	Speed	r/min	800/550	865 / -- / 670
Outdoor coil	a.Number of rows		2	2.5
	b.Tube pitch(a)x row pitch(b)	mm	21x13.37	21x13.37
	c.Fin spacing	mm	1.4	1.4
	d.Fin type (code)		Hydrophilic aluminium	Hydrophilic aluminium
	e.Tube outside dia.and type	mm	Φ7,innergroove tube	Φ7,innergroove tube
	f.Coil length x height x width	mm	655x546x26.74	779x651x26.74+390x651x13.37
	g.Number of circuits		3	6
Outdoor air flow		m3/h	2200	2700
Outdoor noise level		dB(A)	56	59
Outdoor unit	Dimension(W*D*H)	mm	760x285x590	845x320x700
	Packing (W*D*H)	mm	887x355x645	965x395x755
	Net/Gross weight	Kg	37.5 / 39	49.5 / 52.5
Refrigerant type		g	R410A/1180g	R410A/1950g
Design pressure		MPa	4.2/1.5	4.2/1.5
Refrigerant piping	Liquid side/ Gas side	mm(inch)	Φ6.35/Φ12.7(1/4"/1/2")	Φ9.52/Φ15.9(3/8"/5/8")
	Max. refrigerant pipe length	m	20	25
	Max. difference in level	m	8	10
Connection wiring			1.5(Optional)	1.5(Optional)
Plug type			14#	--
Thermostat type			Remote Control	Remote Control
Operation temp		℃	17-30	17-30
Ambient temp (cooling/heating)		℃	0-50/-15-30	0-50/-15-30
Application area		m2	25-42	34-56

Все каталоги и инструкции здесь: https://splitsystema48.ru/instrukcii-po-ekspluatacii-kondicionerov.html

4. Dimension

4.1 Indoor Units

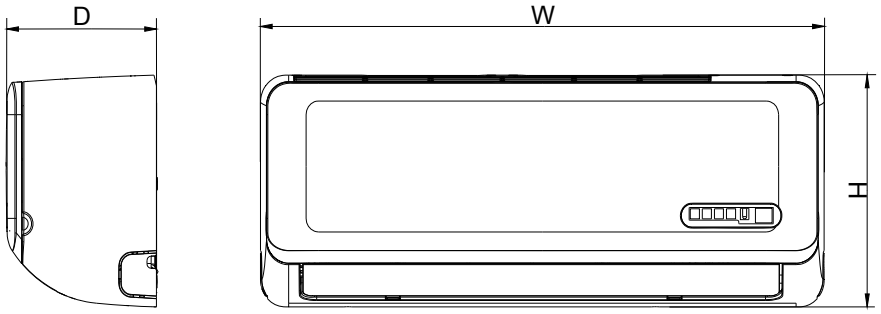

Model	W	D	H
MS11D-09HRDN1	680	178	255
MS11D-12HRDN1	770	188	255
MS11D-18HRDN1	905	198	275
MS11D-24HRDN1	1030	218	315

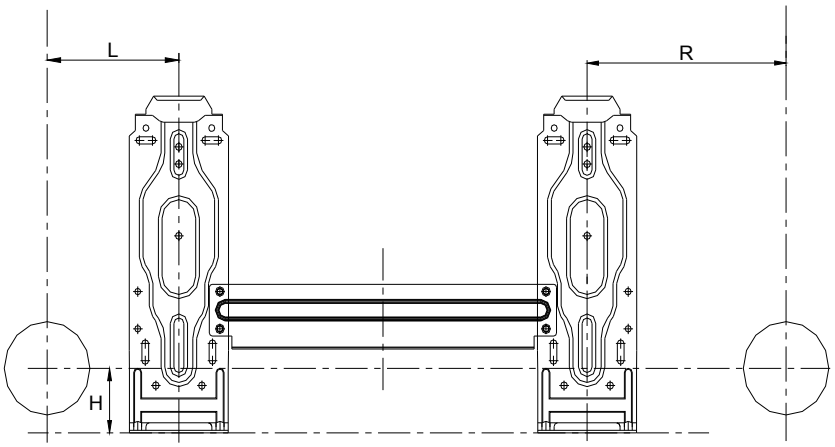

Model	R(mm)	L(mm)	H(mm)	Dimension of installation hole(mm)
MS11D-09HRDN1	92	170	45	¢65
MS11D-12HRDN1	95	170	45	
MS11D-18HRDN1	80	100	45	

Все каталоги и инструкции здесь: https://splitsystema48.ru/instrukcii-po-ekspluatacii-kondicionerov.html

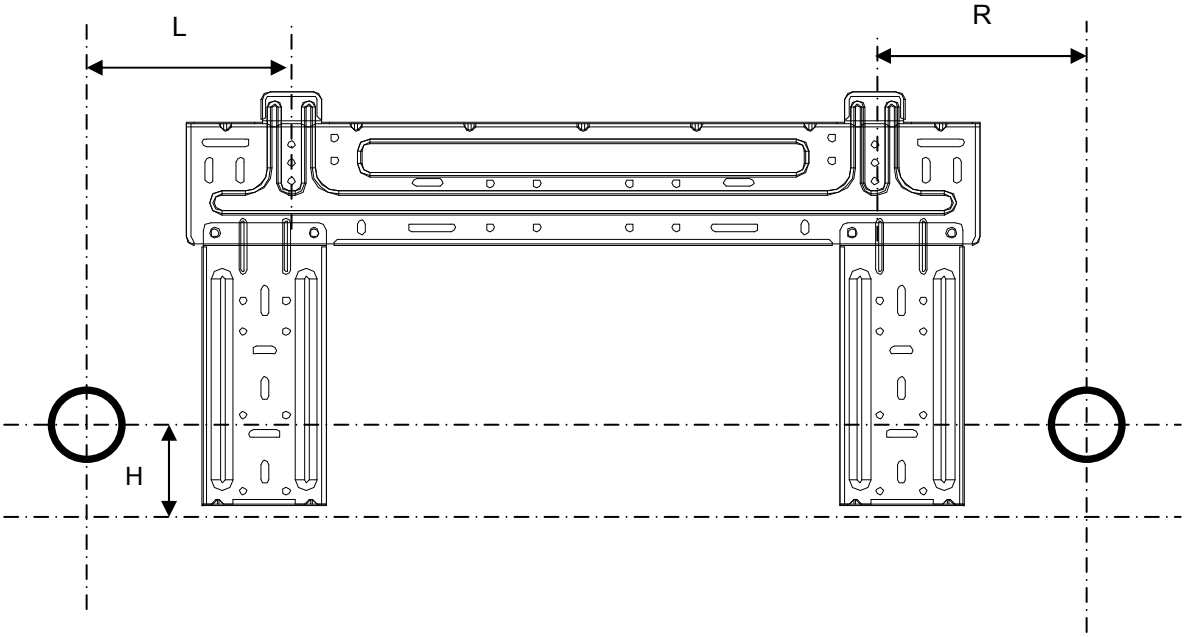

Model	R(mm)	L(mm)	H(mm)	Dimension of installation hole(mm)
MS11D-24HRDN1	163	293	45	¢65

Все каталоги и инструкции здесь: https://splitsystema48.ru/instrukcii-po-ekspluatacii-kondicionerov.html

4.2 Outdoor Units

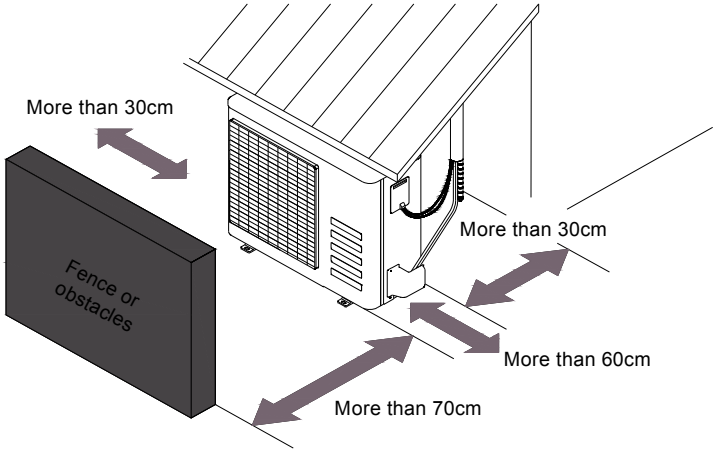

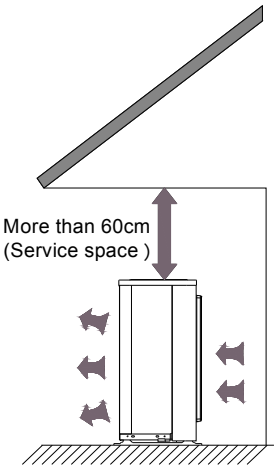

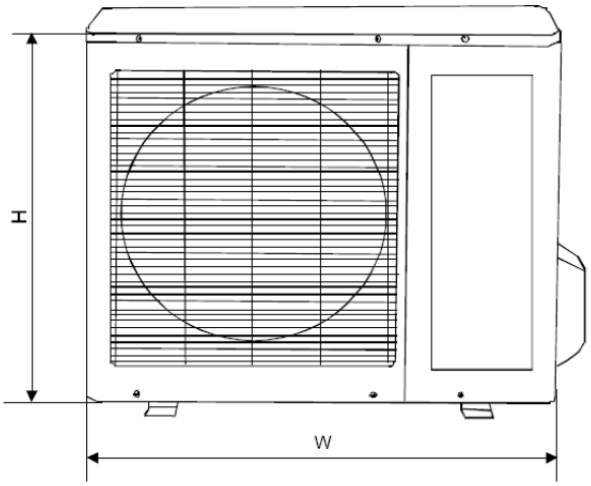

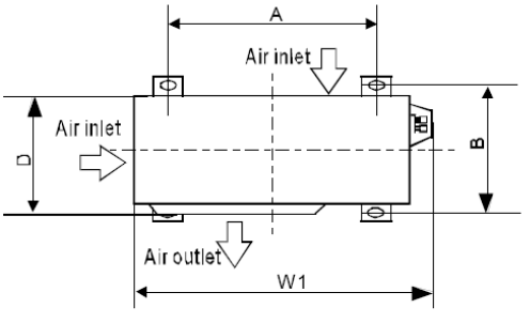

Model	W	H	D	W1	A	B
MO11D-09HRDN1	700	240	540	757	458	250
MO11D-12HRDN1	780	250	540	843	549	276
MO11D-18HRDN1	760	285	590	823	530	290
MO11D-24HRDN1	845	320	700	908	560	335

Все каталоги и инструкции здесь: https://splitsystema48.ru/instrukcii-po-ekspluatacii-kondicionerov.html

5. Capacity tables

MS11D-09HRDN1 / MO11D-09HRDN1

Cooling

Cooling		Outdoor conditions (DB)						
Indoor Conditions	(kW)	21ºC	25ºC	30ºC	35ºC	40ºC	45ºC	50ºC
21/15ºC DB/WB	TC	2,33	2,48	2,50	2,41	2,07	1,96	1,91
	SC	1,86	1,99	2,00	1,93	1,65	1,57	1,53
	Input	0,61	0,66	0,72	0,79	0,80	0,81	0,84
24/17ºC DB/WB	TC	2,40	2,56	2,58	2,48	2,13	2,02	1,97
	SC	1,92	2,04	2,06	1,99	1,70	1,62	1,57
	Input	0,62	0,67	0,73	0,80	0,81	0,82	0,85
27/19ºC DB/WB	TC	2,55	2,72	2,74	2,64	2,27	2,15	2,09
	SC	2,04	2,17	2,19	2,11	1,81	1,72	1,67
	Input	0,64	0,69	0,75	0,82	0,83	0,85	0,88
32/23ºC DB/WB	TC	2,93	3,13	3,15	3,04	2,61	2,47	2,41
	SC	2,35	2,50	2,52	2,43	2,08	1,98	1,92
	Input	0,73	0,78	0,85	0,93	0,95	0,96	1,00

Heating

Heating		Outdoor conditions							
Indoor Conditions (DB)	(kW)	24ºC D 8ºC W	12ºC D 11ºC W	7ºC D 6ºC W	4ºC D 3ºC W	0ºC D -1ºC W	-5ºC D -6ºC W	-7ºC D -8ºC W	-15ºC D -16ºC W
15ºC	TC	4,03	3,87	3,40	2,96	2,47	2,11	1,96	1,86
	Input	1,36	1,38	0,93	0,89	0,85	0,82	0,80	0,79
18ºC	TC	3,82	3,67	3,22	2,80	2,34	2,00	1,86	1,76
	Input	1,36	1,38	0,88	0,84	0,81	0,77	0,75	0,75
20ºC	TC	3,47	3,33	2,93	2,55	2,13	1,82	1,69	1,60
	Input	1,36	1,38	0,81	0,77	0,74	0,71	0,69	0,68
22ºC	TC	3,26	3,13	2,75	2,40	2,00	1,71	1,59	1,50
	Input	1,36	1,38	0,80	0,77	0,73	0,70	0,69	0,68
27ºC	TC	2,95	2,83	2,49	2,17	1,81	1,55	1,43	1,36
	Input	1,36	1,38	0,74	0,70	0,67	0,64	0,63	0,62

Remark:

TC : Total capacity ; kW

SC: Sensible heat capacity ; kW

Input: Input power ; kW

Все каталоги и инструкции здесь: https://splitsystema48.ru/instrukcii-po-ekspluatacii-kondicionerov.html

MS11D-12HRDN1 / MO11D-12HRDN1

Cooling

Cooling		Outdoor conditions (DB)						
Indoor Conditions	(kW)	21ºC	25ºC	30ºC	35ºC	40ºC	45ºC	50ºC
21/15ºC DB/WB	TC	3,10	3,31	3,34	3,21	2,76	2,61	2,55
	SC	2,48	2,65	2,67	2,57	2,21	2,09	2,04
	Input	0,82	0,88	0,96	1,05	1,06	1,08	1,12
24/17ºC DB/WB	TC	3,20	3,41	3,44	3,31	2,84	2,69	2,62
	SC	2,56	2,73	2,75	2,65	2,27	2,15	2,10
	Input	0,82	0,89	0,97	1,06	1,07	1,09	1,13
27/19ºC DB/WB	TC	3,40	3,62	3,66	3,52	3,02	2,86	2,79
	SC	2,72	2,90	2,93	2,82	2,42	2,29	2,23
	Input	0,85	0,92	1,00	1,09	1,11	1,13	1,17
32/23ºC DB/WB	TC	3,91	4,17	4,21	4,05	3,47	3,29	3,21
	SC	3,13	3,33	3,36	3,24	2,78	2,63	2,57
	Input	0,97	1,04	1,14	1,24	1,26	1,28	1,33

Heating

Heating		Outdoor conditions							
Indoor Conditions (DB)	(kW)	24ºC D 8ºC W	12ºC D 11ºC W	7ºC D 6ºC W	4ºC D 3ºC W	0ºC D -1ºC W	-5ºC D -6ºC W	-7ºC D -8ºC W	-15ºC D -16ºC W
15ºC	TC	5,44	5,23	4,59	4,00	3,34	2,85	2,65	2,51
	Input	1,36	1,38	1,25	1,20	1,14	1,10	1,07	1,06
18ºC	TC	5,16	4,96	4,36	3,79	3,17	2,71	2,51	2,38
	Input	1,36	1,38	1,19	1,13	1,08	1,04	1,02	1,00
20ºC	TC	4,69	4,51	3,96	3,45	2,88	2,46	2,28	2,16
	Input	1,36	1,38	1,09	1,04	0,99	0,95	0,93	0,92
22ºC	TC	4,41	4,24	3,72	3,24	2,71	2,31	2,14	2,03
	Input	1,36	1,38	1,08	1,03	0,99	0,95	0,93	0,91
27ºC	TC	3,99	3,83	3,37	2,93	2,45	2,09	1,94	1,84
	Input	1,36	1,38	0,99	0,95	0,90	0,87	0,85	0,84

Remark:

TC : Total capacity ; kW

SC: Sensible heat capacity ; kW

Input: Input power ; kW

Все каталоги и инструкции здесь: https://splitsystema48.ru/instrukcii-po-ekspluatacii-kondicionerov.html

MS11D-18HRDN1 / MO11D-18HRDN1

Cooling

Cooling		Outdoor conditions (DB)						
Indoor Conditions	(kW)	21ºC	25ºC	30ºC	35ºC	40ºC	45ºC	50ºC
21/15ºC DB/WB	TC	4,66	4,96	5,01	4,82	4,14	3,92	3,82
	SC	3,72	3,97	4,01	3,86	3,31	3,14	3,06
	Input	1,23	1,32	1,44	1,58	1,60	1,63	1,69
24/17ºC DB/WB	TC	4,79	5,11	5,16	4,96	4,26	4,04	3,93
	SC	3,83	4,09	4,12	3,97	3,41	3,23	3,15
	Input	1,24	1,34	1,46	1,59	1,61	1,64	1,70
27/19ºC DB/WB	TC	5,10	5,44	5,48	5,28	4,53	4,30	4,18
	SC	4,08	4,35	4,39	4,22	3,63	3,44	3,35
	Input	1,28	1,38	1,50	1,64	1,66	1,69	1,76
32/23ºC DB/WB	TC	5,86	6,25	6,31	6,07	5,21	4,94	4,81
	SC	4,69	5,00	5,05	4,86	4,17	3,95	3,85
	Input	1,45	1,57	1,71	1,87	1,89	1,93	2,00

Heating

Heating		Outdoor conditions							
Indoor Conditions (DB)	(kW)	24ºC D 8ºC W	12ºC D 11ºC W	7ºC D 6ºC W	4ºC D 3ºC W	0ºC D -1ºC W	-5ºC D -6ºC W	-7ºC D -8ºC W	-15ºC D -16ºC W
15ºC	TC	7,26	6,97	6,12	5,33	4,45	3,80	3,53	3,34
	Input	1,36	1,38	1,68	1,60	1,53	1,47	1,44	1,42
18ºC	TC	6,88	6,61	5,81	5,05	4,22	3,61	3,35	3,17
	Input	1,36	1,38	1,59	1,52	1,45	1,39	1,36	1,34
20ºC	TC	6,26	6,01	5,28	4,59	3,84	3,28	3,04	2,88
	Input	1,36	1,38	1,46	1,39	1,33	1,28	1,25	1,23
22ºC	TC	5,88	5,65	4,96	4,32	3,61	3,08	2,86	2,71
	Input	1,36	1,38	1,45	1,38	1,32	1,27	1,24	1,22
27ºC	TC	5,32	5,11	4,49	3,90	3,26	2,79	2,59	2,45
	Input	1,36	1,38	1,33	1,27	1,21	1,16	1,14	1,12

Remark:

TC : Total capacity ; kW

SC: Sensible heat capacity ; kW

Input: Input power ; kW

Все каталоги и инструкции здесь: https://splitsystema48.ru/instrukcii-po-ekspluatacii-kondicionerov.html

6. Refrigerant Cycle Diagram

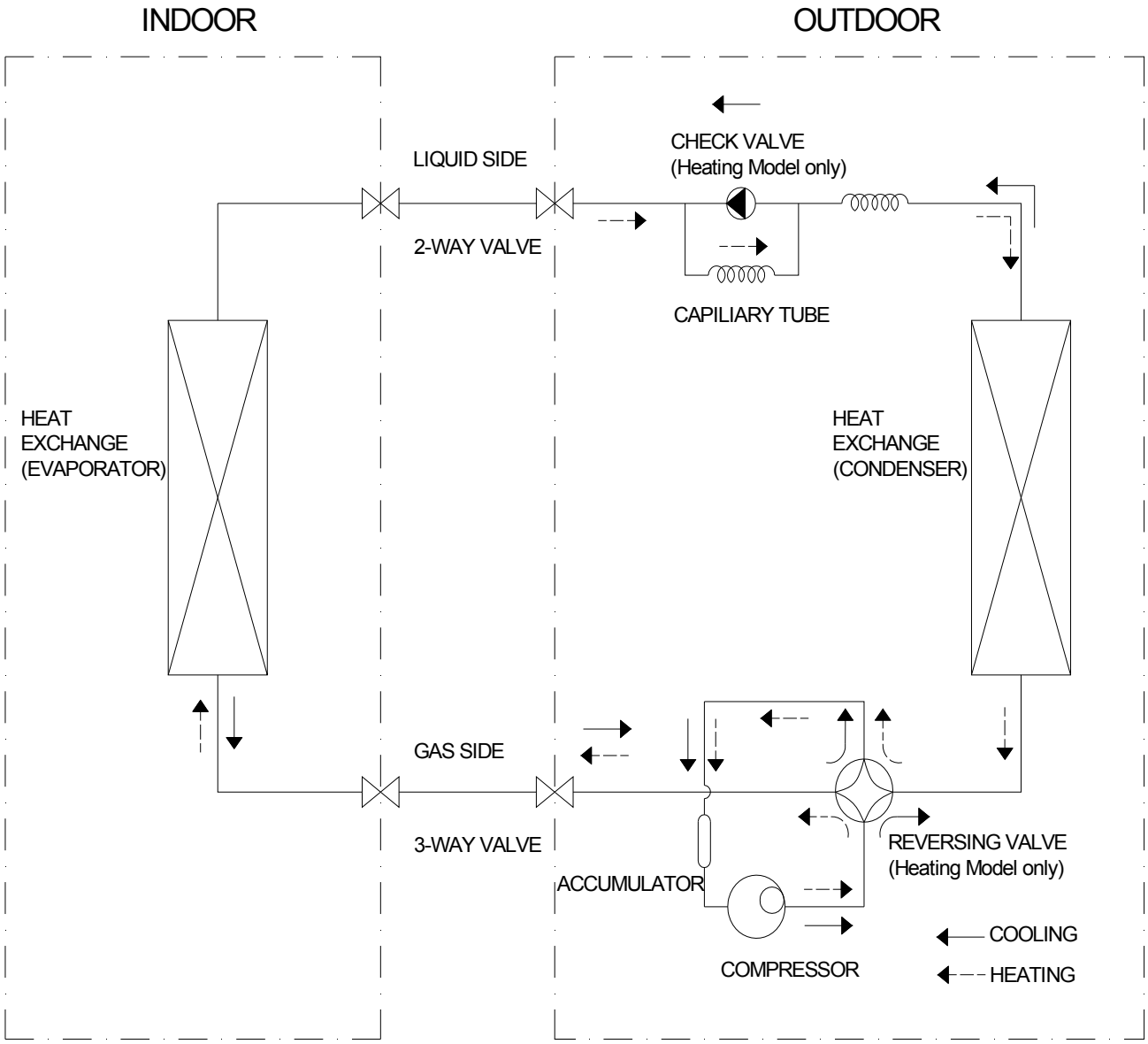

Все каталоги и инструкции здесь: https://splitsystema48.ru/instrukcii-po-ekspluatacii-kondicionerov.html

7. Wiring Diagram

7.1 Indoor Units

MS11D-09HRDN1 MS11D-12HRDN1 MS11D-18HRDN1

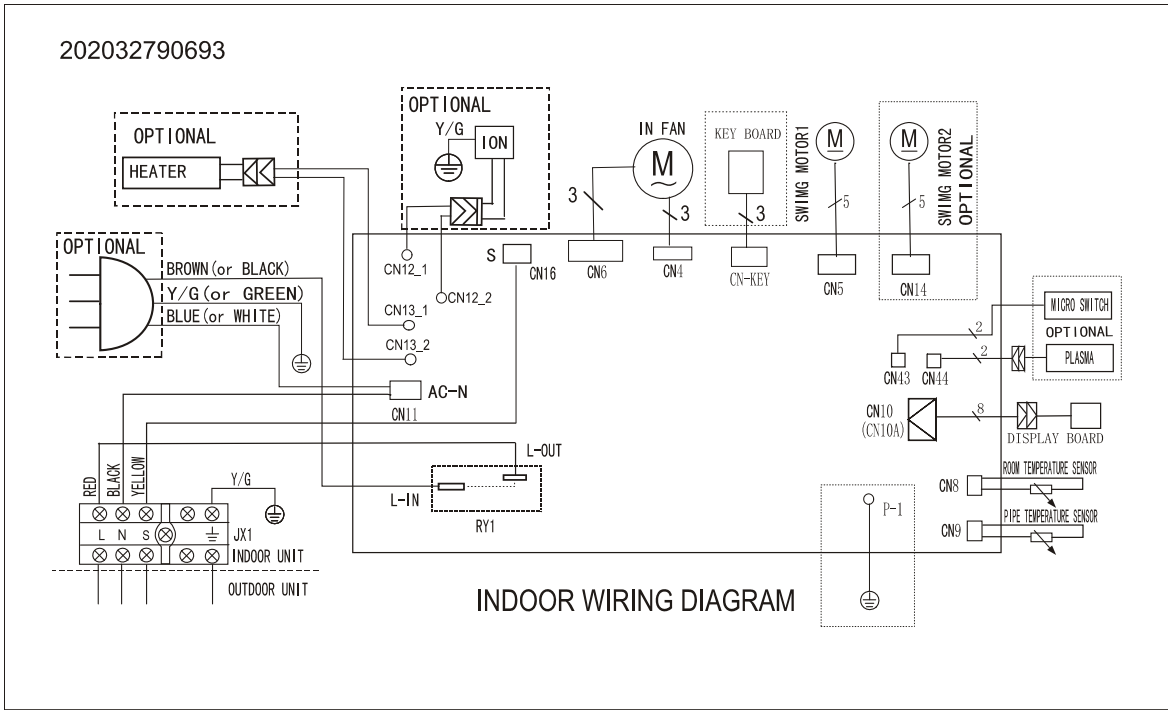

MS11D-24HRDN1

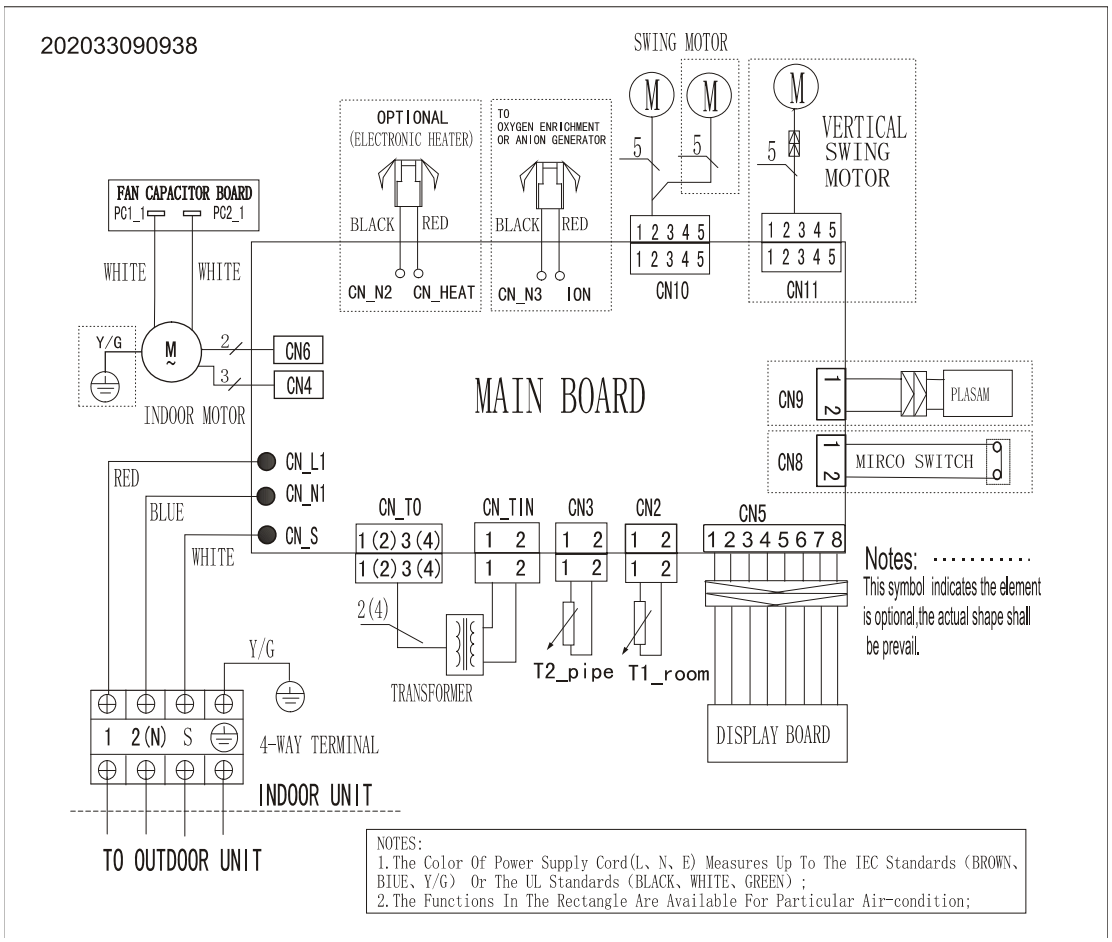

Все каталоги и инструкции здесь: https://splitsystema48.ru/instrukcii-po-ekspluatacii-kondicionerov.html

7.2 Outdoor Units

MO11D-09HRDN1 MO11D-12HRDN1

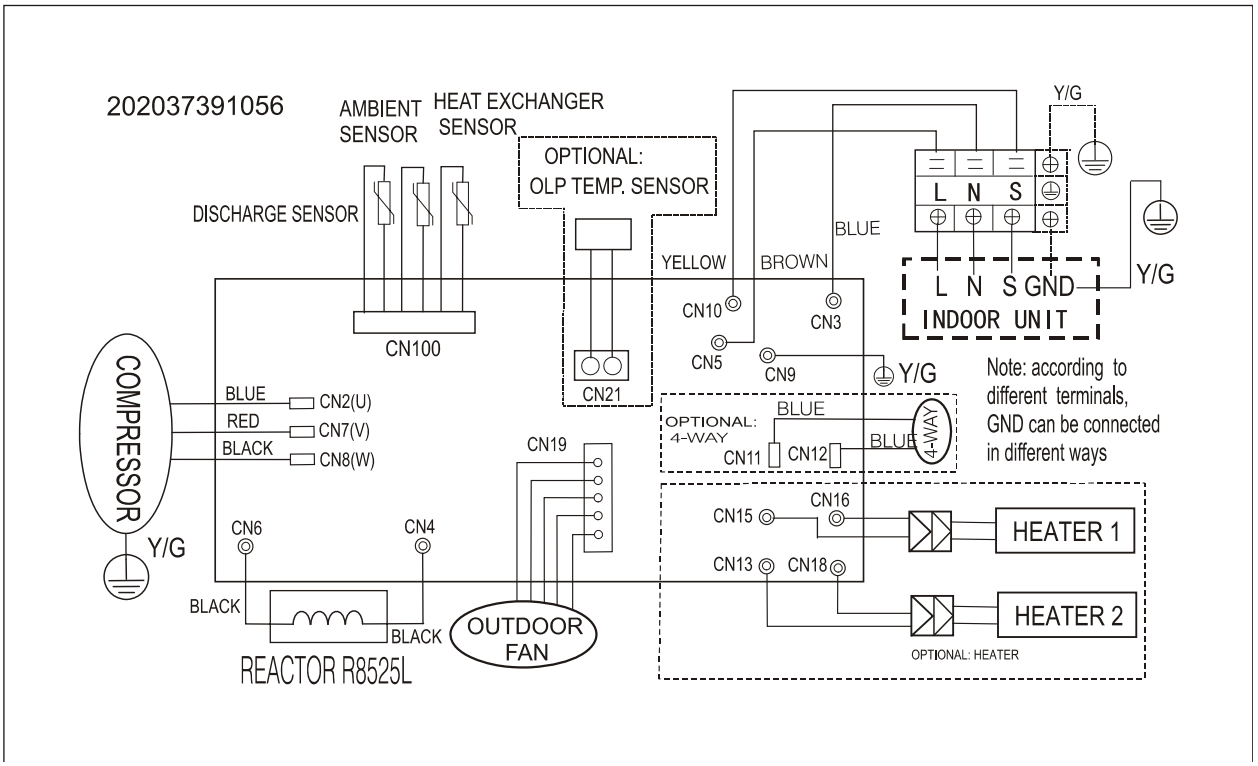

MO11D-18HRDN1

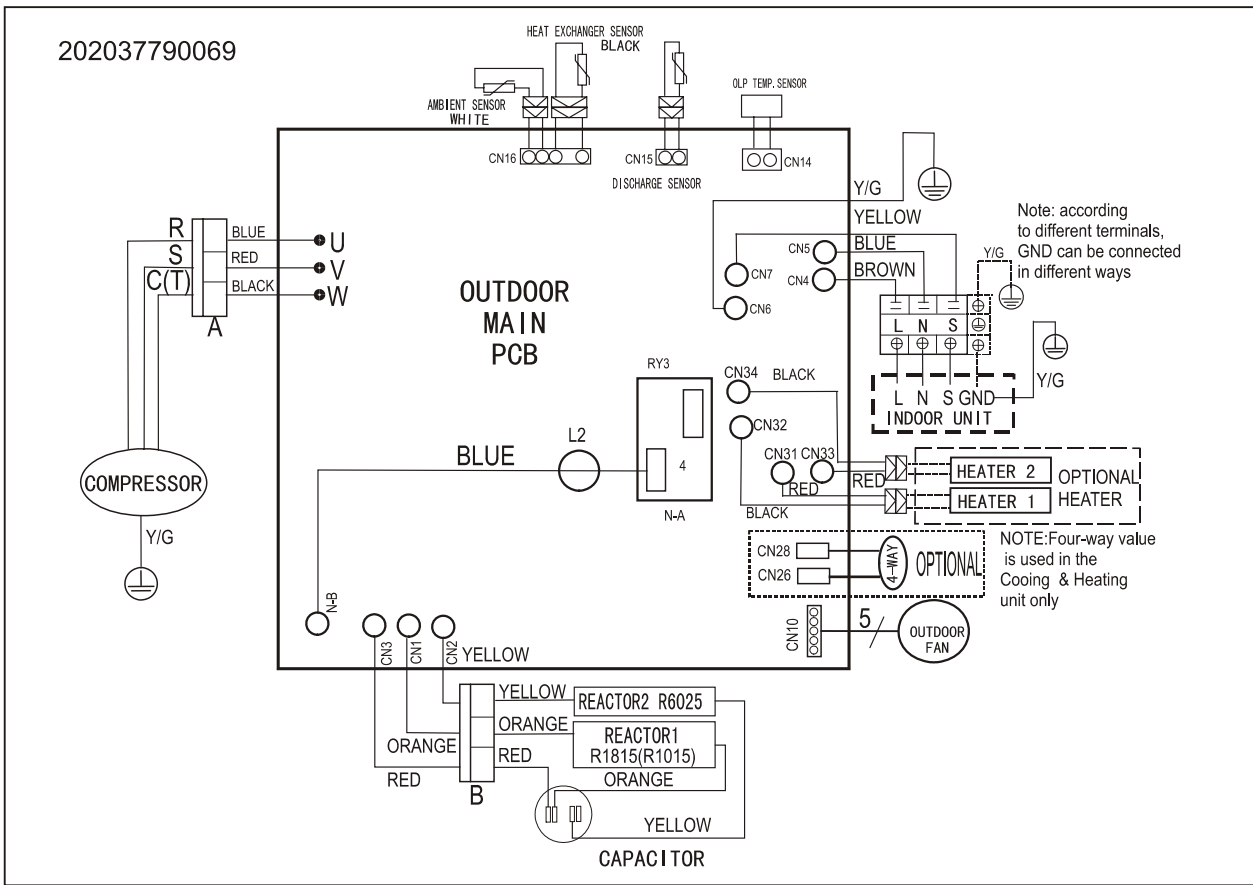

Все каталоги и инструкции здесь: https://splitsystema48.ru/instrukcii-po-ekspluatacii-kondicionerov.html

MO11D-24HRDN1

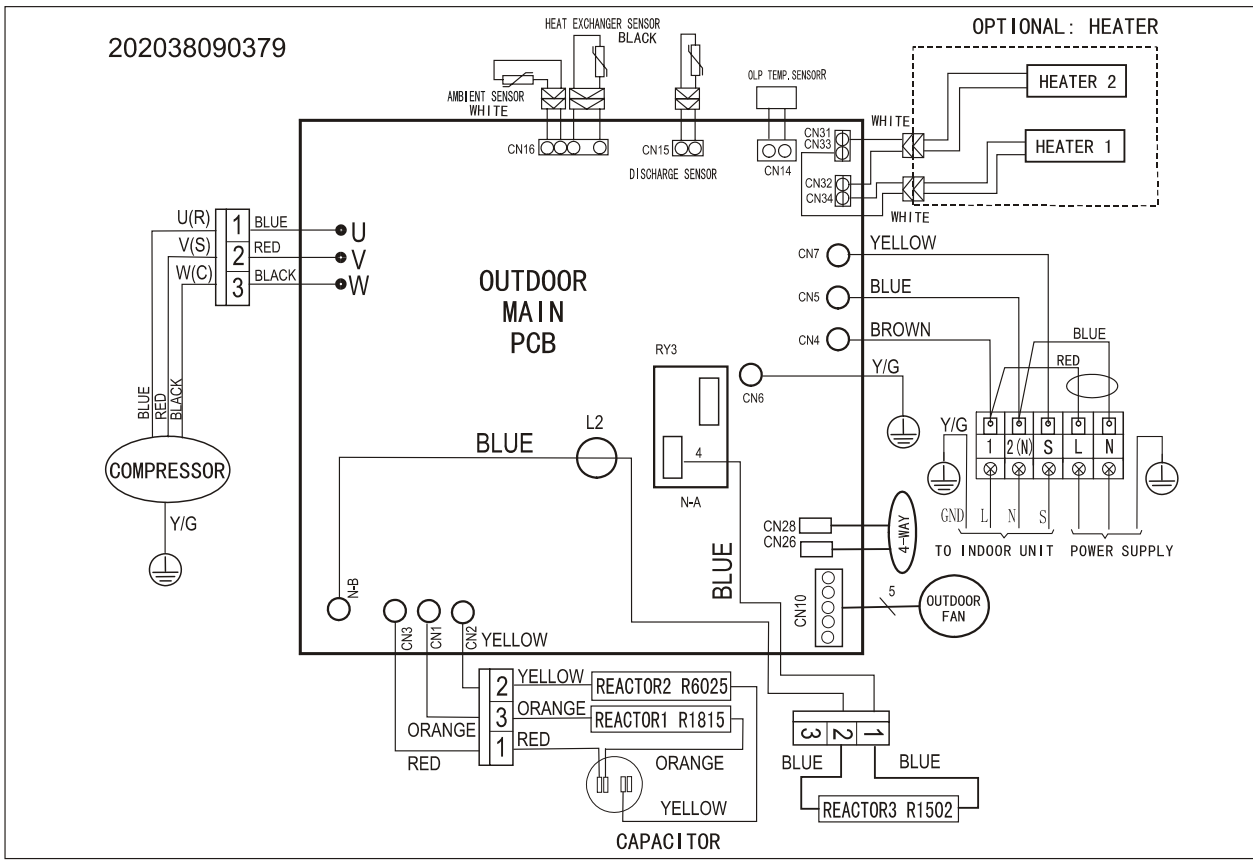

Все каталоги и инструкции здесь: https://splitsystema48.ru/instrukcii-po-ekspluatacii-kondicionerov.html

8. Installation details

8.1 Wrench torque sheet for installation

Outside diameter		Torque	Additional tightening torque
mm	inch	N.cm	N.cm
Φ6.35	1/4	1500 (153kgf.cm)	1600 (163kgf.cm)
Φ9.52	3/8	2500 (255kgf.cm)	2600 (265kgf.cm)
Φ12.7	1/2	3500 (357kgf.cm)	3600 (367kgf.cm)

8.2 Connecting the cables

The power cord of connect should be selected according to the following specifications sheet.

Rated current of appliance	Nominal cross-sectional area (mm²)
>3 and ≤6	0.75
>6 and ≤10	1.0
>10 and ≤16	1.5
>16 and ≤25	2.5

The cable size and the current of the fuse or switch are determined by the maximum current indicated on the nameplate which located on the side panel of the unit. Please refer to the nameplate before selecting the cable, fuse and switch.

8.3 Pipe length and the elevation

The pipe length and refrigerant amount:

Model	Pipe size		Standard length (m)	Max. Elevation B (m)	Max. Length A (m)	Additional refrigerant (g/m)
	Gas	Liquid				
MS11D-09HRDN1 / MO11D-09HRDN1	3/8" (Φ9.53)	1/4" (Φ6.35)	5	8	20	20
MS11D-12HRDN1 / MO11D-12HRDN1			5	8	20	20
MS11D-18HRDN1 / MO11D-18HRDN1	1/2" (Φ12.7)	1/4" (Φ6.35)	5	10	25	20
MS11D-24HRDN1 / MO11D-24HRDN1	5/8" (Φ16.0)	3/8" (Φ9.53)	5	10	25	40

Все каталоги и инструкции здесь: https://splitsystema48.ru/instrukcii-po-ekspluatacii-kondicionerov.html

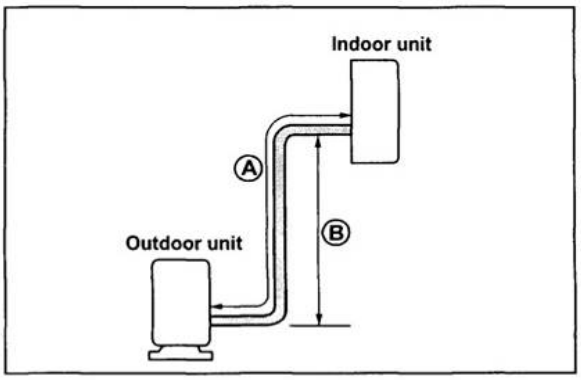

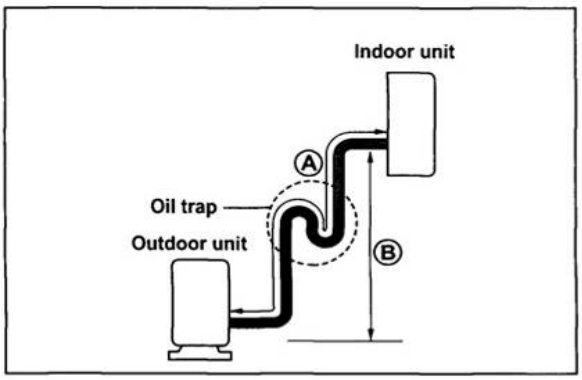

Caution:

Capacity test is based on standard length and maximum allowance length is based on system reliability.

Oil trap should be installed per 5-7 meters.

Все каталоги и инструкции здесь: https://splitsystema48.ru/instrukcii-po-ekspluatacii-kondicionerov.html

8.4 Installation for the first time

Air and moisture in the refrigerant system have undesirable effects as below:

- Pressure in the system rises.
- Operating current rises.
- Cooling or heating efficiency drops.
- Moisture in the refrigerant circuit may freeze and block capillary tubing.
- Water may lead to corrosion of parts in the refrigerant system.

Therefore, the indoor units and the pipes between indoor and outdoor units must be leak tested and evacuated to remove gas and moisture from the system.

Gas leak check (Soap water method):

Apply soap water or a liquid neutral detergent on the indoor unit connections or outdoor unit connections by a soft brush to check for leakage of the connecting points of the piping. If bubbles come out, the pipes have leakage.

1. Air purging with vacuum pump

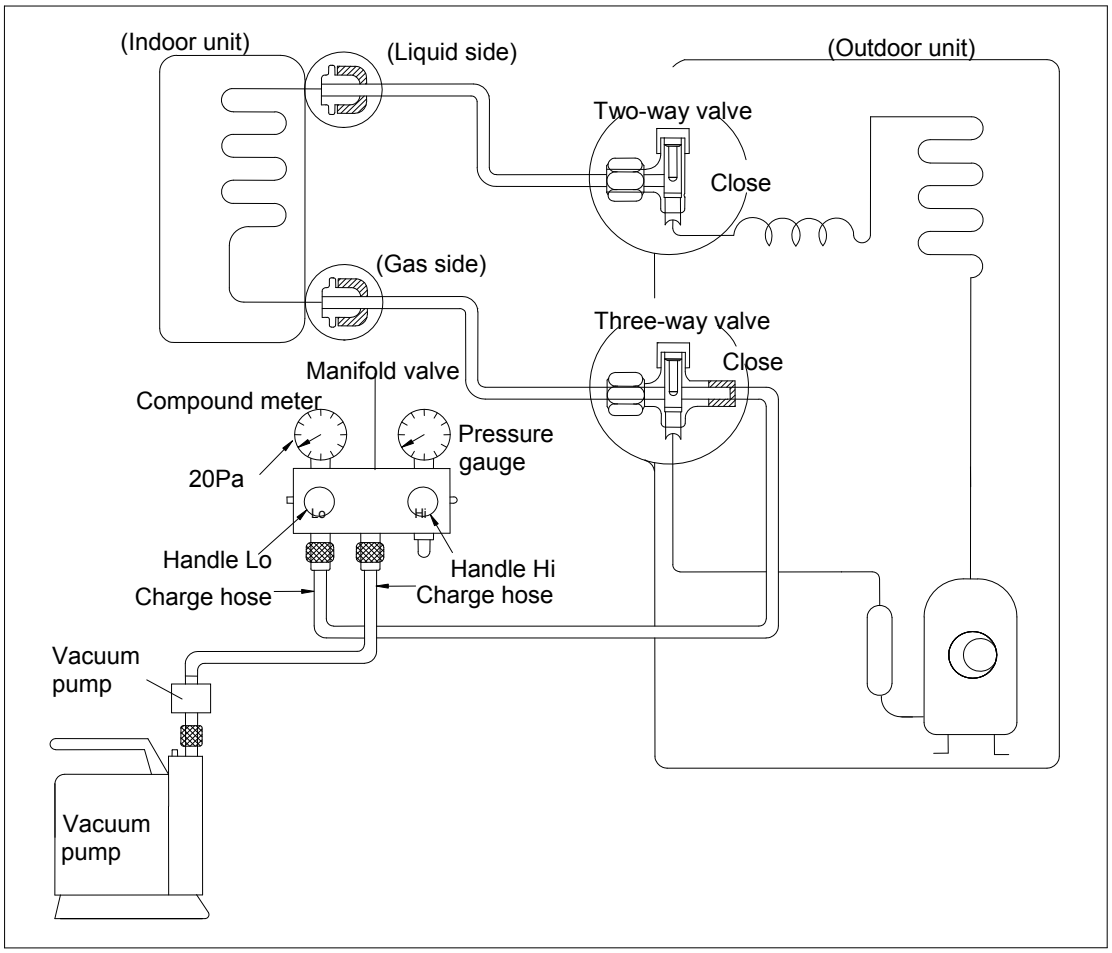

1) Completely tighten the flare nuts of the indoor and outdoor units, confirm that both the 2-way and 3-way valves are set to the closed position.
2) Connect the charge hose with the push pin of handle lo to the 3-way valves gas service port..
3) Connect the charge hose of handle hi connection to the vacuum pump.
4) Fully open the handle Lo of the manifold valve.
5) Operate the vacuum pump to evacuate.
6) Make evacuation for 30 minutes and check whether the compound meter indicates -0.1Mpa. If the

Все каталоги и инструкции здесь: https://splitsystema48.ru/instrukcii-po-ekspluatacii-kondicionerov.html

meter does not indicate -0.1Mpa after pumping 30 minutes, it should be pumped 20 minutes more. If the pressure can't achieve -0.1Mpa after pumping 50 minutes, please check if there are some leakage points.

Fully close the handle Lo valve of the manifold valve and stop the operation of the vacuum pump. Confirm that the gauge needle does not move (approximately 5 minutes after turning off the vacuum pump).

7) Turn the flare nut of the 3-way valves about 45° counterclockwise for 6 or 7seconds after the gas coming out, and then tighten the flare nut again. Make sure the pressure display in the pressure indicator is a little higher than the atmosphere pressure. Then remove the charge hose from the 3 way valve.

8) Fully open the 2 way valve and 3 way valve and securely tighten the cap of the 3 way valve.

2. Air purging by refrigerant

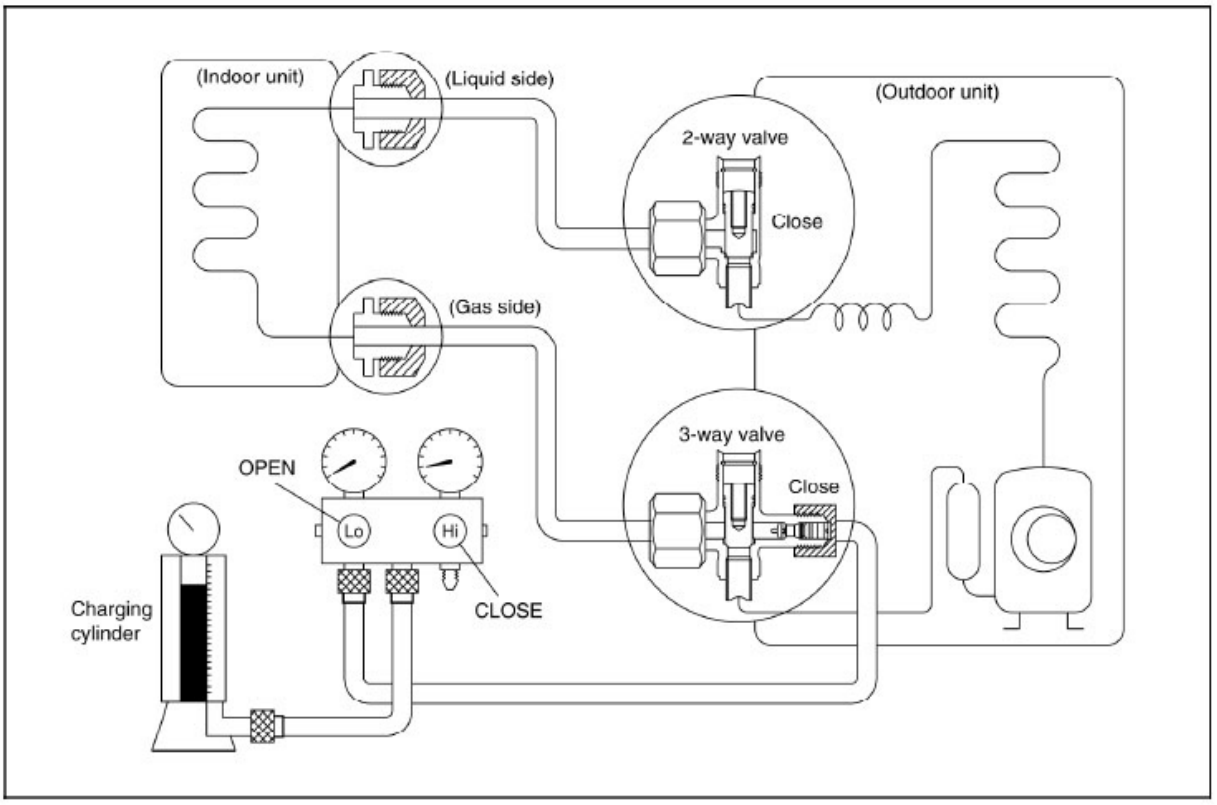

Procedure:

1). Confirm that both the 2-way and 3-way valves are set to the closed position.

2). Connect the charge set and a charging cylinder to the service port of the 3-way valve.

3). Air purging.

Open the valves on the charging cylinder and the charge set. Purge the air by loosening the flare nut on the 2-way valve approximately 45' for 3 seconds then closing it for 1 minute; repeat 3 times.

After purging the air, use a torque wrench to tighten the flare nut on the 2-way valve.

4). Check the gas leakage.

Check the flare connections for gas leakage.

5). Discharge the refrigerant.

Все каталоги и инструкции здесь: https://splitsystema48.ru/instrukcii-po-ekspluatacii-kondicionerov.html

Close the valve on the charging cylinder and discharge the refrigerant by loosening the flare nut on the 2-way valve approximately 45’ until the gauge indicates 0.3 to 0.5 Mpa.

6). Disconnect the charge set and the charging cylinder, and set the 2-way and 3-way valves to the open position.

Be sure to use a hexagonal wrench to operate the valve stems.

7). Mount the valve stems nuts and the service port cap.

Be sure to use a torque wrench to tighten the service port cap to a torque 18N·m.

Be sure to check the gas leakage.

3. Adding the refrigerant if the pipe length >5m

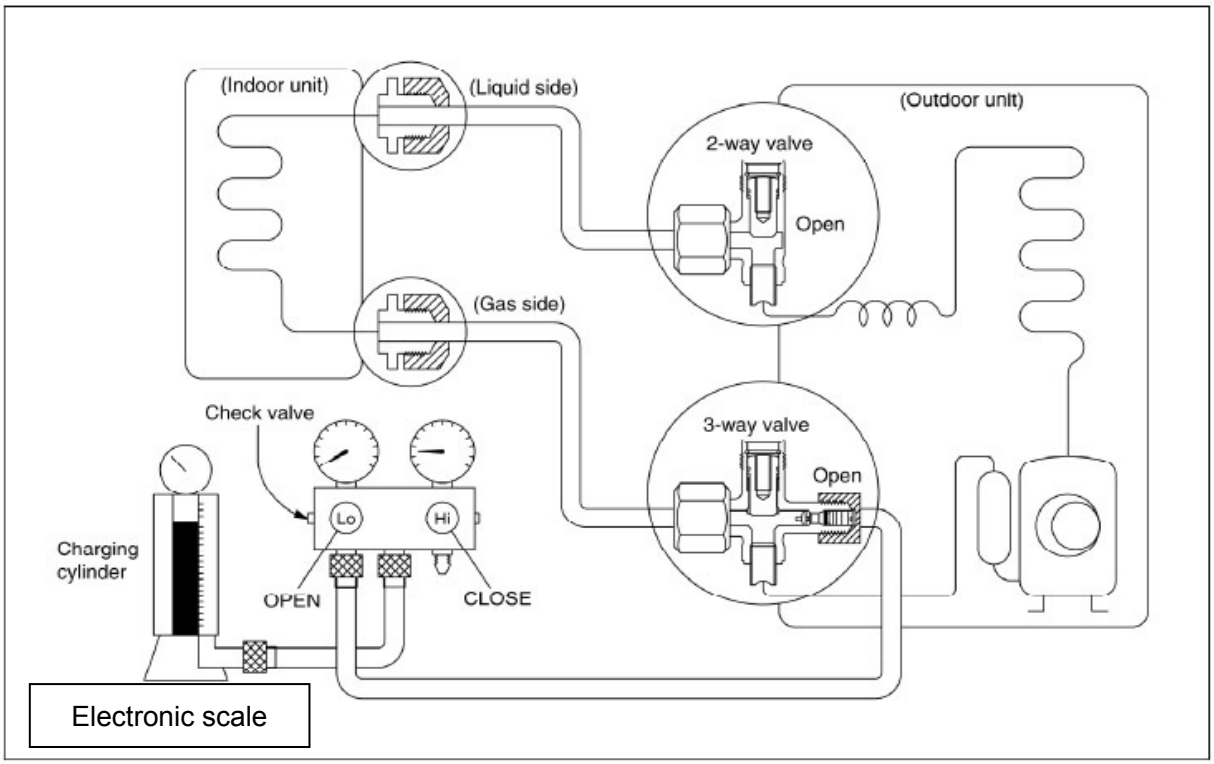

Procedure:

1). Connect the charge hose to the charging cylinder; open the 2-way valve and the 3-way valve.

Connect the charge hose which you disconnected from the vacuum pump to the valve at the bottom of the cylinder. If the refrigerant is R410A, make the cylinder bottom up to ensure the liquid charge.

2). Purge the air from the charge hose.

Open the valve at the bottom of the cylinder and press the check valve on the charge set to purge the air (be careful of the liquid refrigerant).

3) Put the charging cylinder onto the electronic scale and record the weight.

4) Operate the air conditioner at the cooling mode.

5) Open the valves (Low side) on the charge set and charge the system with liquid refrigerant.

Все каталоги и инструкции здесь: https://splitsystema48.ru/instrukcii-po-ekspluatacii-kondicionerov.html

6).When the electronic scale displays the proper weight (refer to the table), disconnect the charge hose from the 3-way valve's service port immediately and turn off the air conditioner before disconnecting the hose.

7). Mount the valve stem caps and the service port

Use torque wrench to tighten the service port cap to a torque of 18N.m.

Be sure to check for gas leakage.

8.5 Adding the refrigerant after running the system for many years

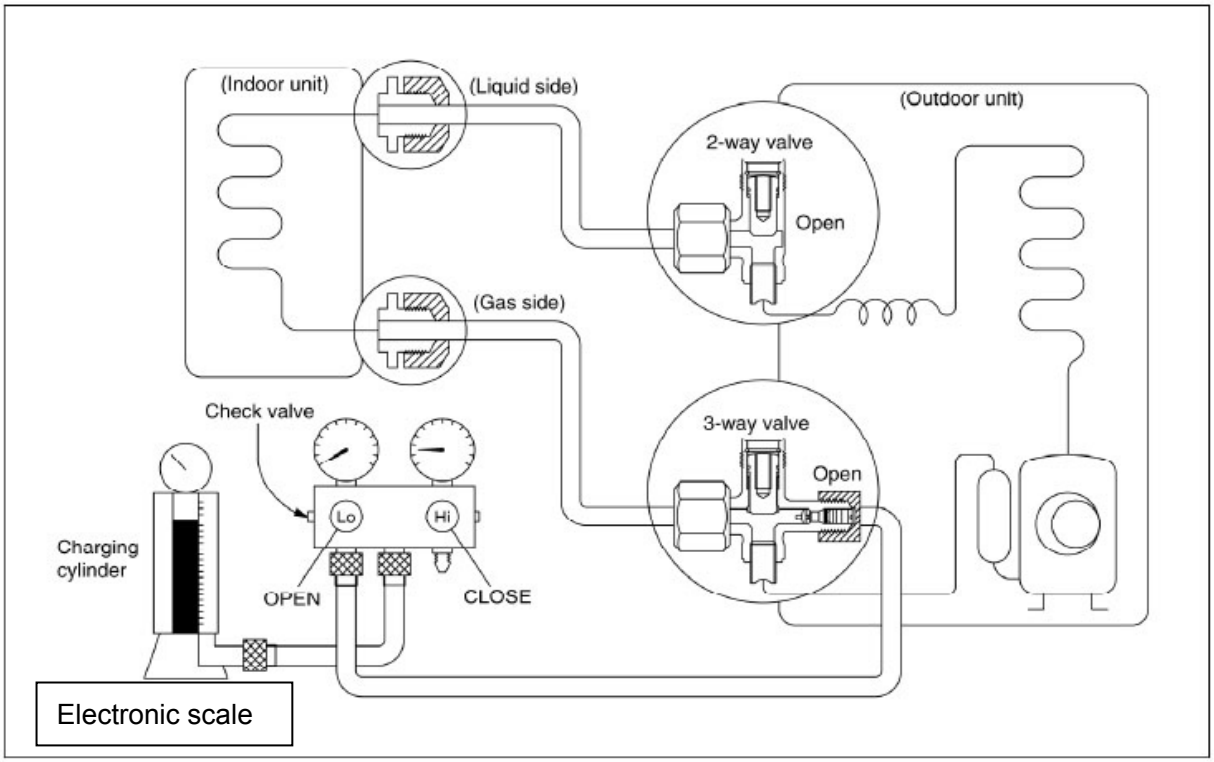

Procedure:

1). Connect the charge hose to the 3-way service port, open the 2-way valve and the 3-way valve. Connect the charge hose to the valve at the bottom of the cylinder. If the refrigerant is R410A, make the cylinder bottom up to ensure liquid charge.

2). Purge the air from the charge hose.

Open the valve at the bottom of the cylinder and press the check valve on the charge set to purge the air (be careful of the liquid refrigerant).

3) Put the charging cylinder onto the electronic scale and record the weight.

4) Operate the air conditioner at the cooling mode.

5) Open the valves (Low side) on the charge set and charge the system with liquid refrigerant.

6).When the electronic scale displays the proper weight (refer to the gauge and the pressure of the low

Все каталоги и инструкции здесь: https://splitsystema48.ru/instrukcii-po-ekspluatacii-kondicionerov.html

side), disconnect the charge hose from the 3-way valve's service port immediately and turn off the air conditioner before disconnecting the hose.

7). Mount the valve stem caps and the service port

Use torque wrench to tighten the service port cap to a torque of 18N.m.

Be sure to check for gas leakage.

8.6 Re-installation while the indoor unit need to be repaired

1. Collecting the refrigerant into the outdoor unit

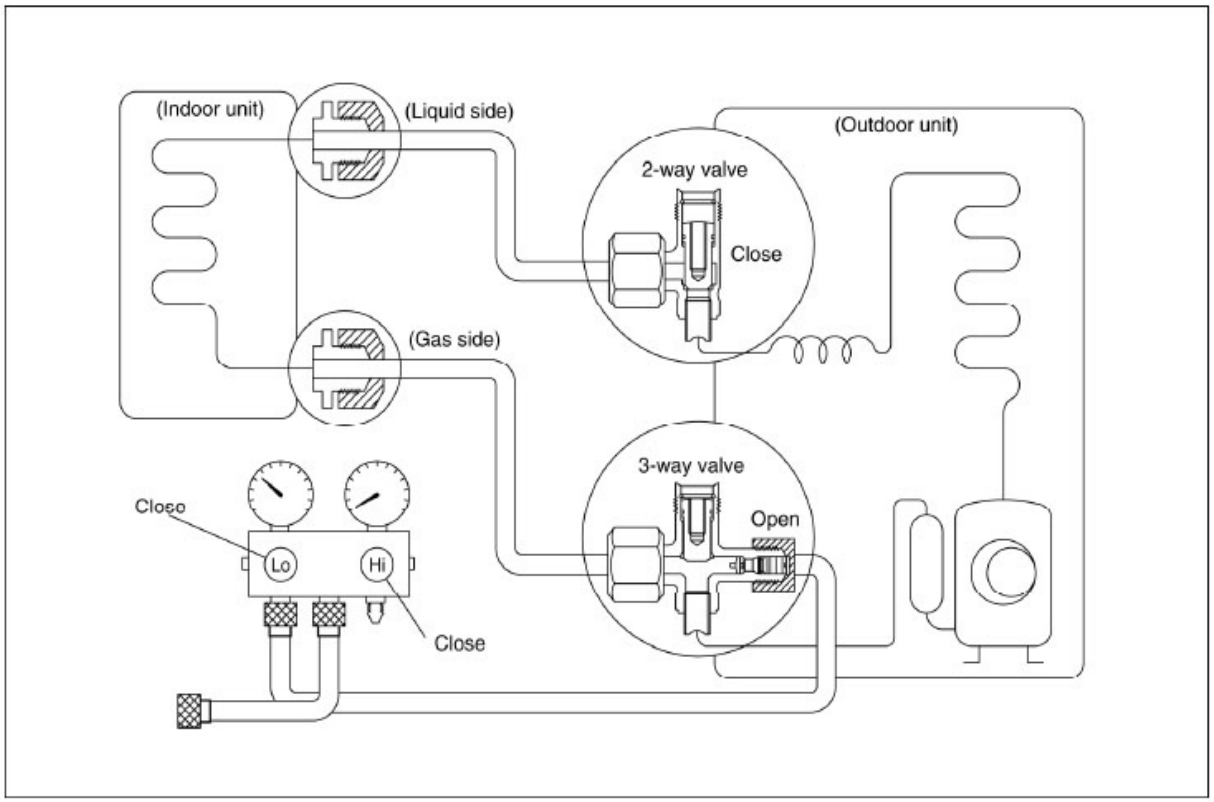

Procedure

1). Confirm that both the 2-way and 3-way valves are set to the opened position

Remove the valve stem caps and confirm that the valve stems are in the opened position.

Be sure to use a hexagonal wrench to operate the valve stems.

2). Connect the charge hose with the push pin of handle lo to the 3-way valves gas service port.

3). Air purging of the charge hose.

Open the handle Lo valve of the manifold valve slightly to purge air from the charge hose for 5 seconds and then close it quickly.

4). Set the 2-way valve to the close position.

5). Operate the air conditioner at the cooling cycle and stop it when the gauge indicates 0.1MPa.

Все каталоги и инструкции здесь: https://splitsystema48.ru/instrukcii-po-ekspluatacii-kondicionerov.html

6). Set the 3-way valve to the closed position immediately

Do this quickly so that the gauge ends up indicating 0.3 to 0.5Mpa.

Disconnect the charge set, and tighten the 2-way and 3-way valve's stem nuts.

Use a torque wrench to tighten the 3-way valves service port cap to a torque of 1.8 kgf.m.

Be sure to check for gas leakage.

2. Air purging by the refrigerant

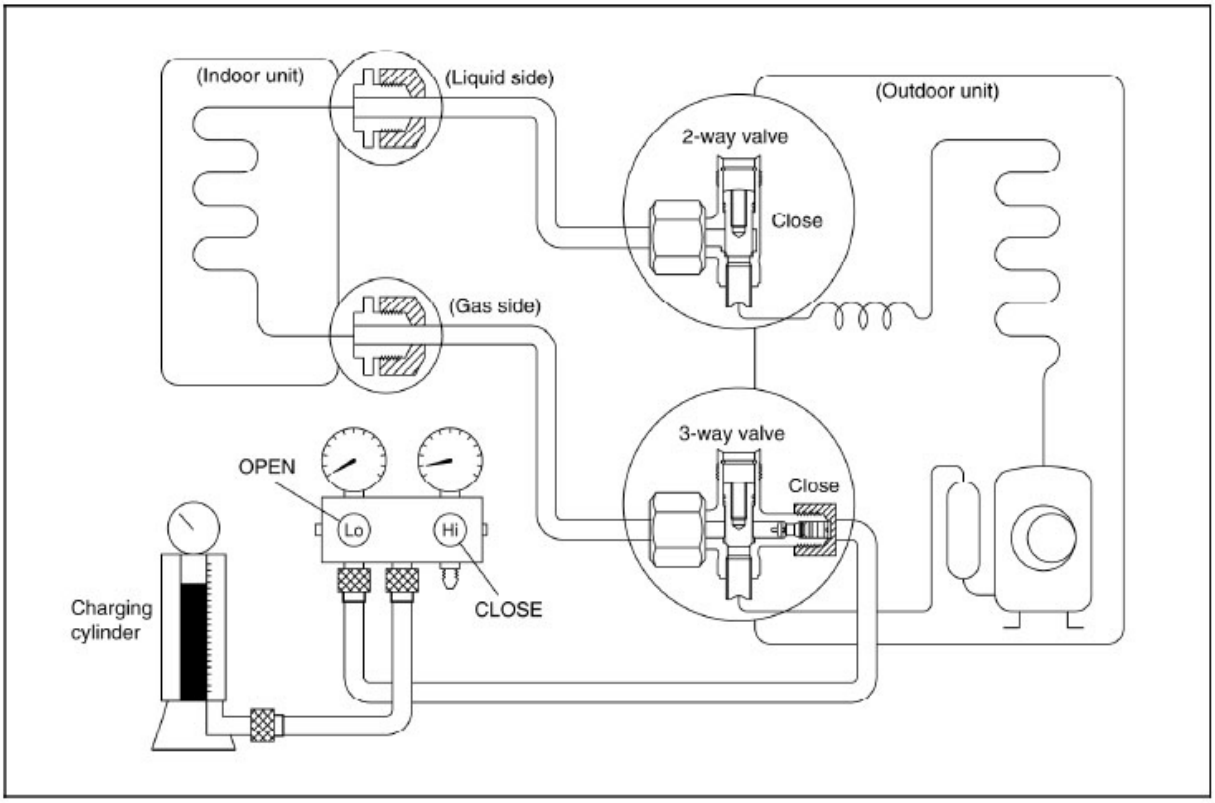

Procedure:

1). Confirm that both the 2-way and 3-way valves are set to the closed position.

2). Connect the charge set and a charging cylinder to the service port of the 3-way valve

Leave the valve on the charging cylinder closed.

3). Air purging.

Open the valves on the charging cylinder and the charge set. Purge the air by loosening the flare nut on the 2-way valve approximately 45' for 3 seconds then closing it for 1 minute; repeat 3 times.

After purging the air, use a torque wrench to tighten the flare nut on the 2-way valve.

4). Check the gas leakage

Check the flare connections for gas leakage.

5). Discharge the refrigerant.

Close the valve on the charging cylinder and discharge the refrigerant by loosening the flare nut on the

Все каталоги и инструкции здесь: https://splitsystema48.ru/instrukcii-po-ekspluatacii-kondicionerov.html

2-way valve approximately 45’ until the gauge indicates 0.3 to 0.5 Mpa.

6). Disconnect the charge set and the charging cylinder, and set the 2-way and 3-way valves to the open position

Be sure to use a hexagonal wrench to operate the valve stems.

7). Mount the valve stems nuts and the service port cap

Be sure to use a torque wrench to tighten the service port cap to a torque 18N.m.

Be sure to check the gas leakage.

8.7 Re-installation while the outdoor unit need to be repaired

1. Evacuation for the whole system

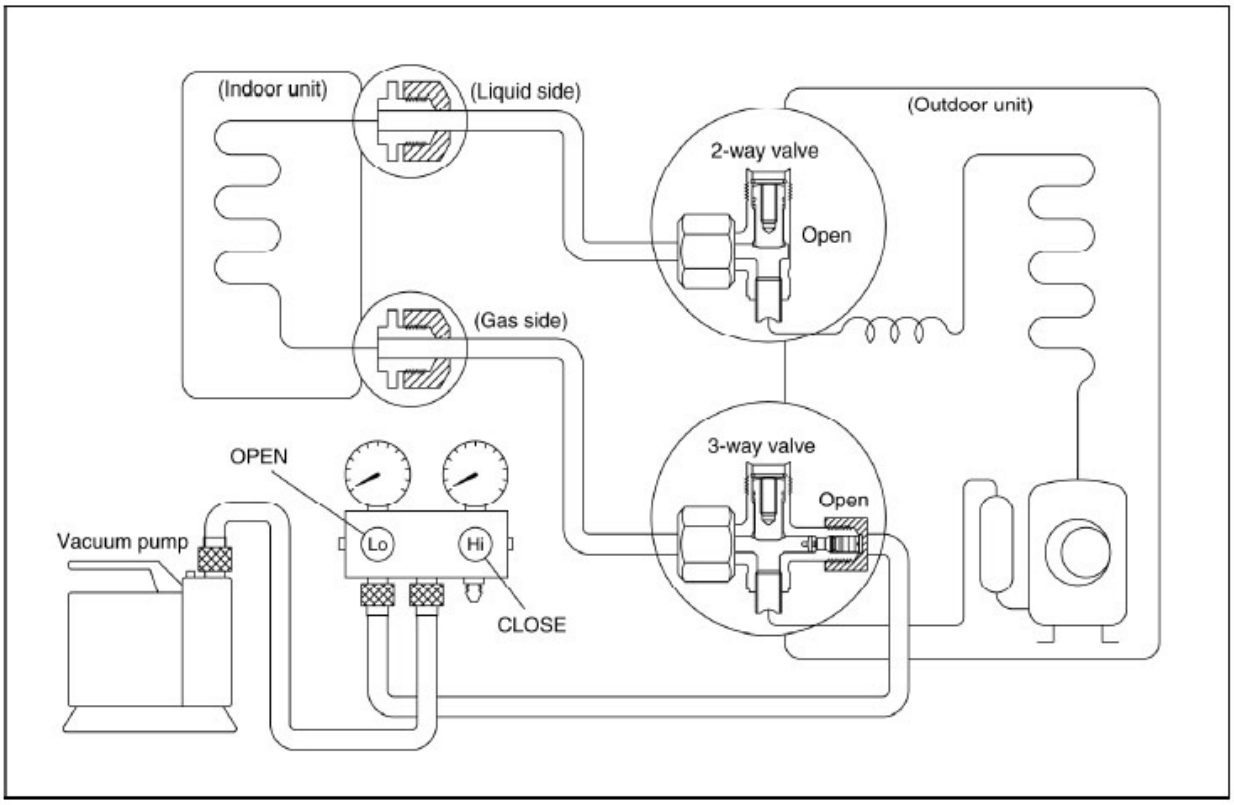

Procedure:

1). Confirm that both the 2-way and 3-way valves are set to the opened position.

2). Connect the vacuum pump to 3-way valve’s service port.

3). Evacuation for approximately one hour. Confirm that the compound meter indicates -0.1Mpa.

4). Close the valve (Low side) on the charge set, turn off the vacuum pump, and confirm that the gauge needle does not move (approximately 5 minutes after turning off the vacuum pump).

5). Disconnect the charge hose from the vacuum pump.

Все каталоги и инструкции здесь: https://splitsystema48.ru/instrukcii-po-ekspluatacii-kondicionerov.html

2. Refrigerant charging

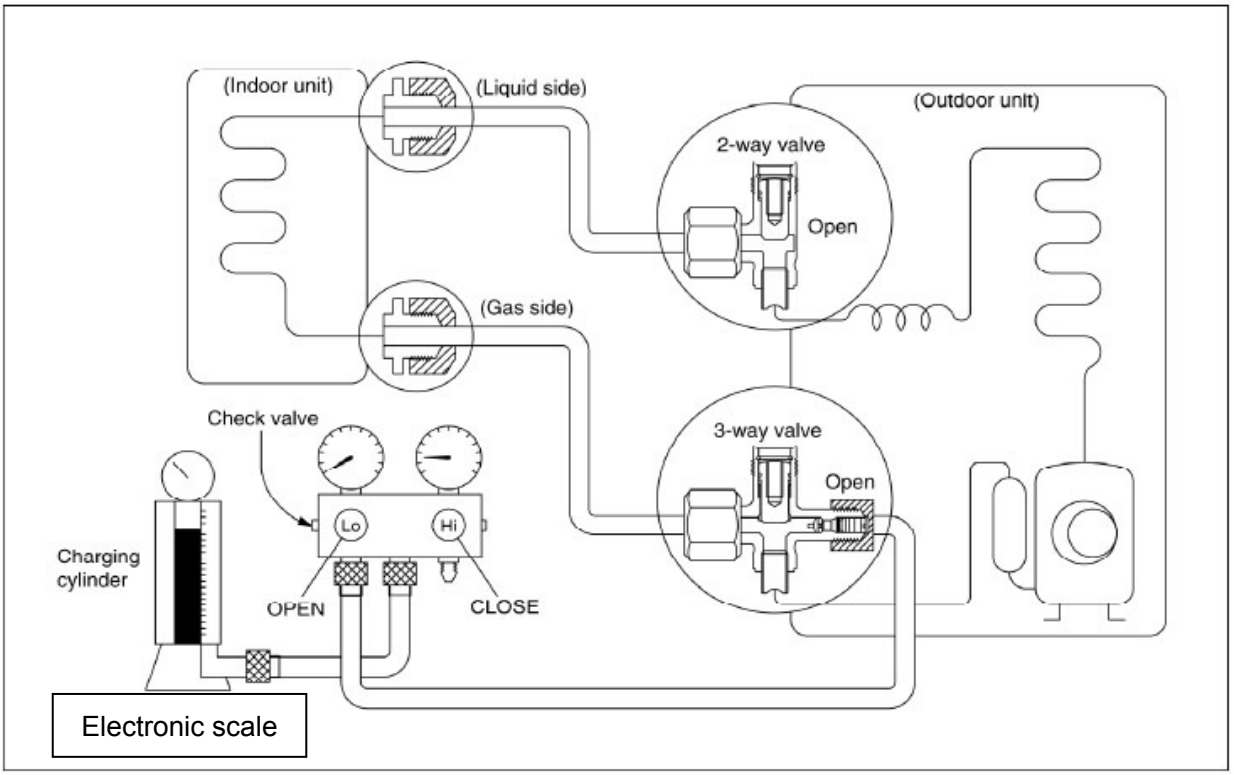

Procedure:

1). Connect the charge hose to the charging cylinder; open the 2-way valve and the 3-way valve

Connect the charge hose which you disconnected from the vacuum pump to the valve at the bottom of the cylinder. If the refrigerant is R410A, make the cylinder bottom up to ensure liquid charge.

2). Purge the air from the charge hose

Open the valve at the bottom of the cylinder and press the check valve on the charge set to purge the air (be careful of the liquid refrigerant).

3) Put the charging cylinder onto the electronic scale and record the weight.

4). Open the valves (Low side) on the charge set and charge the system with liquid refrigerant

If the system cannot be charge with the specified amount of refrigerant, or can be charged with a little at a time (approximately 150g each time) , operating the air conditioner in the cooling cycle; however, one time is not sufficient, wait approximately 1 minute and then repeat the procedure.

5).When the electronic scale displays the proper weight; disconnect the charge hose from the 3-way valve's service port immediately

If the system has been charged with liquid refrigerant while operating the air conditioner, turn off the air conditioner before disconnecting the hose.

6). Mounted the valve stem caps and the service port

Все каталоги и инструкции здесь: https://splitsystema48.ru/instrukcii-po-ekspluatacii-kondicionerov.html

Use torque wrench to tighten the service port cap to a torque of 18N.m.

Be sure to check for gas leakage

Все каталоги и инструкции здесь: https://splitsystema48.ru/instrukcii-po-ekspluatacii-kondicionerov.html

9. Operation characteristics

Temperature / Mode	Cooling operation	Heating operation	Drying operation
Room temperature	≥17℃	≤30℃	> 10℃
Outdoor temperature	0℃ ~ 50℃	-15℃ ~ 30℃	0℃ ~ 50℃

CAUTION:

1. If air conditioner is used outside of the above conditions, certain safety protection features may come into operation and cause the unit to function abnormally.

2. Room relative humidity less than 80%. If the air conditioner operates in excess of this figure, the surface of the air conditioner may attract condensation. Please set the vertical air flow louver to its maximum angle (vertically to the floor), and set HIGH fan mode.

3. Optimum performance will be achieved within this operating temperature.

Все каталоги и инструкции здесь: https://splitsystema48.ru/instrukcii-po-ekspluatacii-kondicionerov.html

10. Electronic function

10.1 Abbreviation

T1: Indoor ambient temperature

T2: Coil temperature of indoor heat exchanger

10.2 Display function

10.2.1 Icon explanation on indoor display board.

One of the following figures matches its display board.

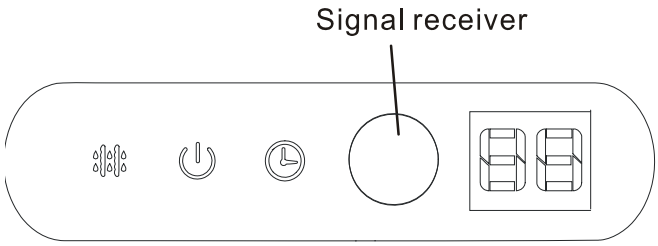

（A）

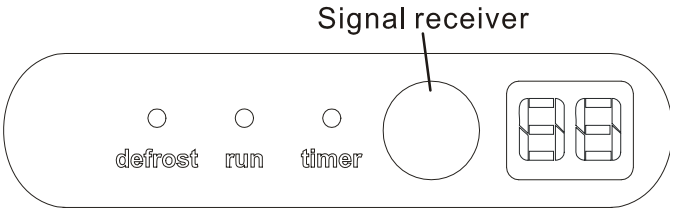

（B）

	Run indicator Flash at 0.5Hz when the unit is standby. Illuminate when the unit is turned on.
	Timer indicator This indicator illuminates when TIMER is set ON/OFF.
	Defrost Indicator This indicator illuminates when the air conditioner starts defrosting automatically or when the warm air control feature is activated in heating mode
	Temperature indicator Displays the temperature settings when the air conditioner is operational. Displays the malfunction code.

Все каталоги и инструкции здесь: https://splitsystema48.ru/instrukcii-po-ekspluatacii-kondicionerov.html

10.3 Main Protection

10.3.1 Three Minutes Delay at restart for compressor

1 minute delay for the 1st time start-up and 3 minutes delay for others.

10.3.2 Temperature protection of compressor top

The unit will stop working when the compressor top temp. protector cut off, and will restart after the compressor top temp. protector restart.

10.3.3 Temperature protection of compressor discharge

When the compressor discharge temp. is getting higher, the running frequency will be limited as below rules:

---Compressor discharge temp. T5>115℃ for 5s, compressor stops.

---108<T5<115℃, decrease the frequency to the lower level every 3 minutes.

---90<T5<105℃, keep running at the current frequency.

----T5<90℃, no limit for frequency.

10.3.4 Fan Speed is out of control

When Indoor Fan Speed keeps too low (300RPM) for certain time, the unit will stop and the LED will display the failure

10.3.5 Inverter module Protection

The Inverter module has a protection function about current, voltage and temperature. If these protections happen, the corresponding code will display on indoor unit and the unit will stop working.

10.3.6 Indoor fan delayed open function

When the unit starts up, the louver will be active immediately and the indoor fan will open 10s later.

If the unit runs in heating mode, the indoor fan will be also controlled by anti-cold wind function.

10.3.7 Compressor preheating functions

Preheating permitting condition:

If T4(outdoor ambient temperature)＜3℃ and the machine connects to power supply newly or if T4＜3℃ and compressor has stopped for over 3 hours, the compressor heating cable will work.

Preheating mode:

A weak current flow through the coil of compressor from the wiring terminal of the compressor, then the compressor is heated without operation.

Preheating release condition:

Все каталоги и инструкции здесь: https://splitsystema48.ru/instrukcii-po-ekspluatacii-kondicionerov.html

If T4＞5℃ or the compressor starts running, the preheating function will stop.

8.3.8 Zero crossing detection error protection

If AC detects time interval is not correct for continuous 240s, the unit will stop and the LED will display the failure. The correct zero crossing signal time interval should be between 6-13ms.

10.4 Operation Modes and Functions

10.4.1 Fan mode

(1) Outdoor fan and compressor stop.

(2) Temperature setting function is disabled, and no setting temperature is displayed.

(3) Indoor fan can be set to high/med/low/auto.

(4) The louver operates same as in cooling mode.

(5) Auto fan:

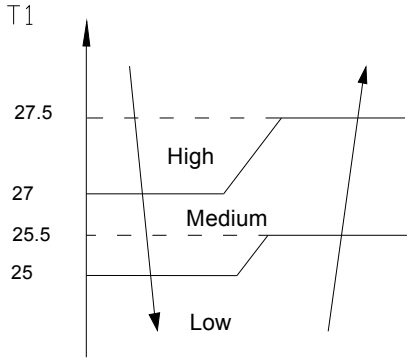

10.4.2 Cooling Mode

10.4.2.1 Compressor running rules

The maximum operation frequency of compressor after starting submits to following rule.

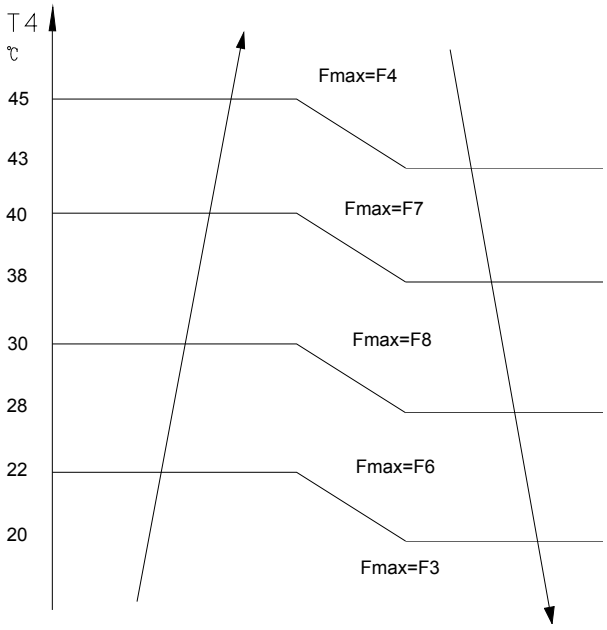

Все каталоги и инструкции здесь: https://splitsystema48.ru/instrukcii-po-ekspluatacii-kondicionerov.html

If users switch on AC by remote controller, the compressor will run at the Fmax frequency for 7 minutes according to the outdoor ambient temp. During the 7 minutes, the frequency limitation is active. 7 minutes later, the compressor running frequency will be controlled as below:

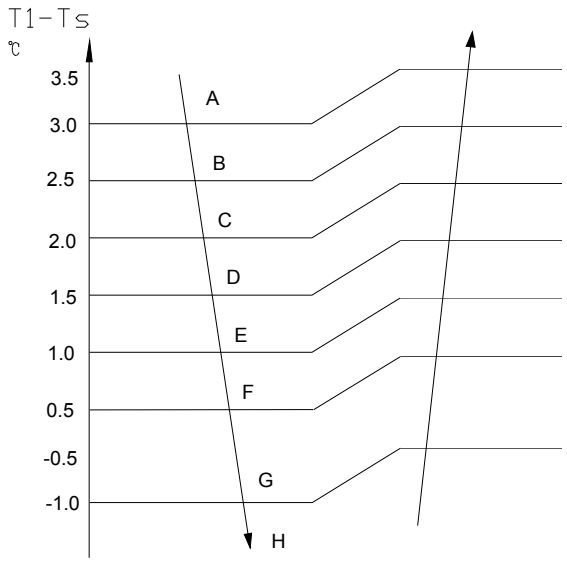

While

Temp. zone	A	B	C	D	E	F	G
Frequency	F8	F8	F7	F6	F5	F3	F1

Note:

When T1-Ts keeps in the same temp. zone for 3 minutes, the compressor will run as the below rules:

A~E: Increase the frequency to the higher level until to F8.

F: Keep the current frequency.

G: Decrease the frequency to the lower level until to F1.

H: Run at F1 for 1h. (if T1-Ts<-2℃, the compressor will stop)

Meanwhile, the compressor running frequency is limited by the current.

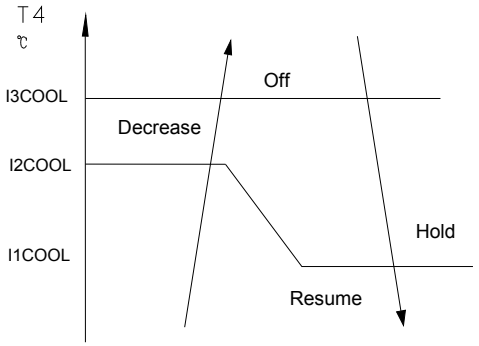

Off: Compressor stops.

Decrease: Decrease the running frequency to the lower level.

Hold: Keep the current frequency.

Все каталоги и инструкции здесь: https://splitsystema48.ru/instrukcii-po-ekspluatacii-kondicionerov.html

Resume: No limitation for frequency.

Note:

When AC is in “hold” zone for 3 minutes, the compressor frequency will rise to the higher level. (frequency will increase twice at most)

10.4.2.2 Outdoor fan running rules

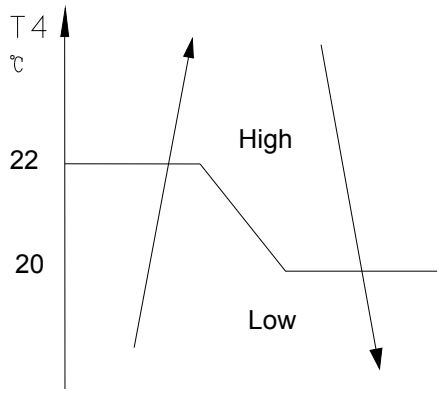

10.4.2.3 Indoor fan running rules

In cooling mode, indoor fan runs all the time and the speed can be selected as high, medium, low and auto.

Auto fan in cooling mode acts as follow:

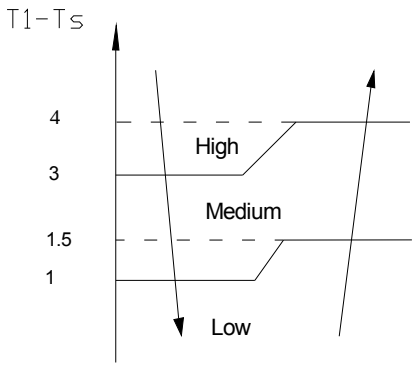

10.4.2.4 Condenser temperature protection

---55℃<T3<60℃, the compressor frequency will decrease to the lower level until to F1 and then runs at F1.If T3<54℃, the compressor will keep running at the current frequency.

---T3<52℃, the compressor will not limit the frequency and resume to the former frequency.

---T3>60℃ for 5 seconds, the compressor will stop until T3<52℃.

10.4.2.5 Evaporator temperature protection

---T2<0℃, the compressor will stop and restart when T2>=5℃.

---0℃≦T2<4℃, the compressor frequency will be limited and decreased to the lower level

---4℃≤T2≤7℃, the compressor will keep the current frequency.

Все каталоги и инструкции здесь: https://splitsystema48.ru/instrukcii-po-ekspluatacii-kondicionerov.html

---T2>7℃, the compressor frequency will not be limited.

10.4.3 Heating Mode

10.4.3.1 Compressor running rules

The maximum operation frequency of the compressor after starting submits to the following rule.

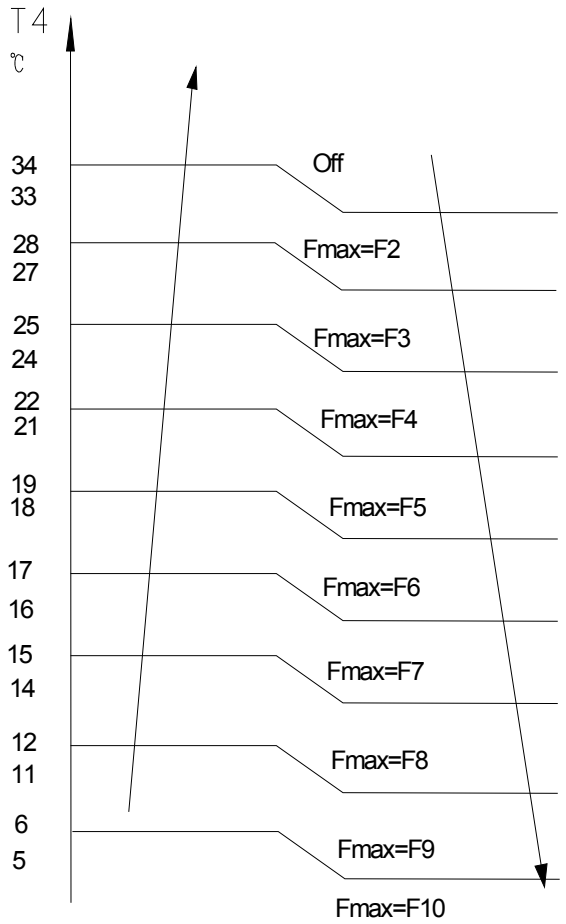

If users switch on AC by remote controller, the compressor will run at the Fmax frequency for 7 minutes according to outdoor ambient temp. During the 7 minutes, the frequency limitation is active.

7 minutes later, the compressor running frequency will be controlled as below:

Все каталоги и инструкции здесь: https://splitsystema48.ru/instrukcii-po-ekspluatacii-kondicionerov.html

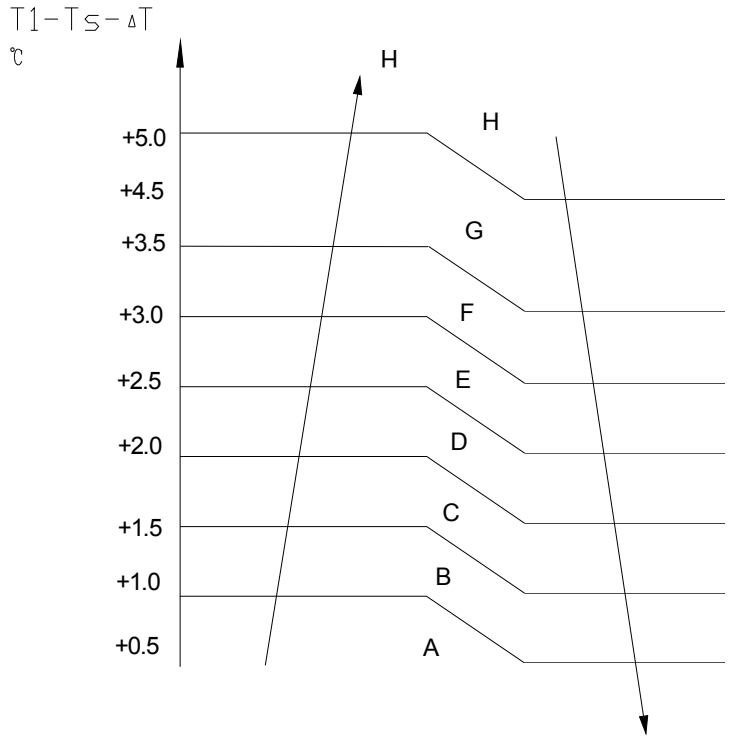

While

Temp. zone	A	B	C	D	E	F	G
Frequency	F10	F9	F8	F7	F5	F3	F1

ΔT=0℃ as default.

Note:

When T1-Ts keeps in the same temp. zone for 3 minutes, the compressor will run as the below rules:

A~E: Increase the frequency to the higher level until to F10.

F: Keep the current frequency.

G: Decrease the frequency to the lower level until to F1.

H: Run at F1 for 1h.(if T1-Ts-ΔT >6℃, the compressor will stop)

Meanwhile, the compressor running frequency is limited by the current.

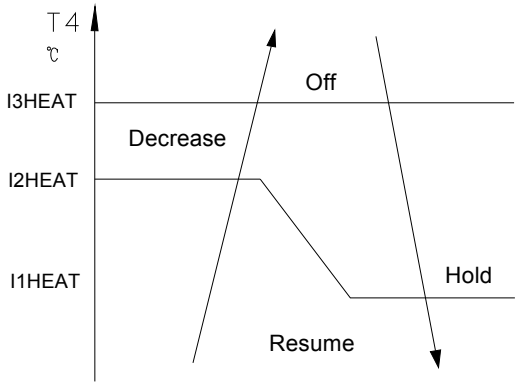

Все каталоги и инструкции здесь: https://splitsystema48.ru/instrukcii-po-ekspluatacii-kondicionerov.html

Off: Compressor stops.

Decrease: Decrease the running frequency to the lower level.

Hold: Keep the current frequency.

Resume: No limitation for frequency.

Note:

When AC is in “hold” zone for 3 minutes, the compressor frequency will rise to the higher level. (The frequency will increase twice at most)

10.4.3.2 Outdoor fan running rules

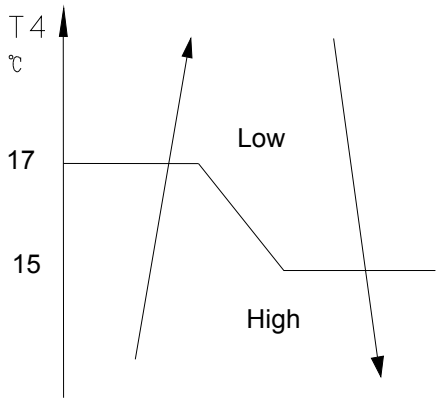

10.4.3.3 Indoor fan running rules

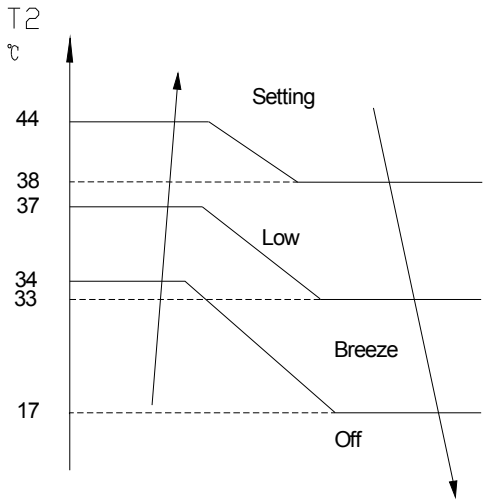

If the compressor stops caused by the room temperature rising, the indoor fan will be forced to run 127 seconds with breeze. During this period, the anti-cold-wind is disabled.

If the machine runs in rating capacity test mode, the indoor fan will run with rating speed and the anti-cold-wind function is disabled.

Indoor fan speed can be set as high, medium, low or auto fan and the anti-cold-wind function is

Все каталоги и инструкции здесь: https://splitsystema48.ru/instrukcii-po-ekspluatacii-kondicionerov.html

preferential.

Auto fan action in heating mode:

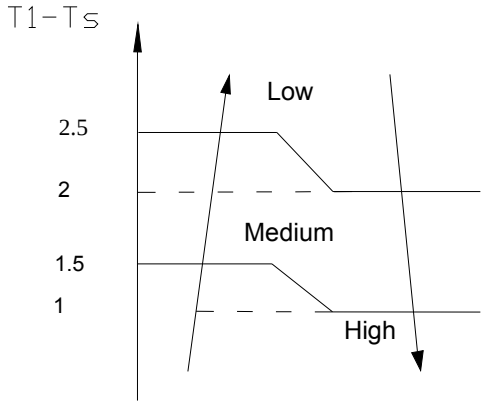

10.4.3.4 Defrosting mode

Condition of defrosting:

----T4＞0℃,

When the units are running, if the following two items are satisfied, the units start defrosting:

The units run with T3＜3℃ for 40 minutes and T3 keeps lower than TCDI℃ for more than 3 minutes.

The units run with T3＜3℃ for 80 minutes and T3 keeps lower than TCDI+2℃ for more than 3 minutes. While TCDI=－6℃.

----T4＜0℃,

If the 1st condition and 2nd condition items are satisfied, then the program judges if T2 has decreased more than 5℃.When T2 has decreased more than 5℃, enter the defrosting mode.

----No matter what value T4 is, if the machine runs with T3＜3℃ for more than 120 minutes and T3 keeps lower than TCDI+4℃ for more than 3 minutes, the machine will enter defrosting mode no matter if T2 drops more than 5℃ or not.

Condition of ending defrosting:

If any one of the following items is satisfied, the defrosting will finish and the machine will turn to normal heating mode.

----T3 rises to be higher than TCDE1℃.

----T3 keeps to be higher than TCDE2℃ for 80 seconds.

----The machine has run for 10 minutes in defrosting mode.

While TCDE1=12℃, TCDE2=8℃ for 9K,12K model. TCDE1=15℃, TCDE2=8℃ for 18k, 24k models.

Все каталоги и инструкции здесь: https://splitsystema48.ru/instrukcii-po-ekspluatacii-kondicionerov.html

Defrosting action:

For 9K, 12K models:

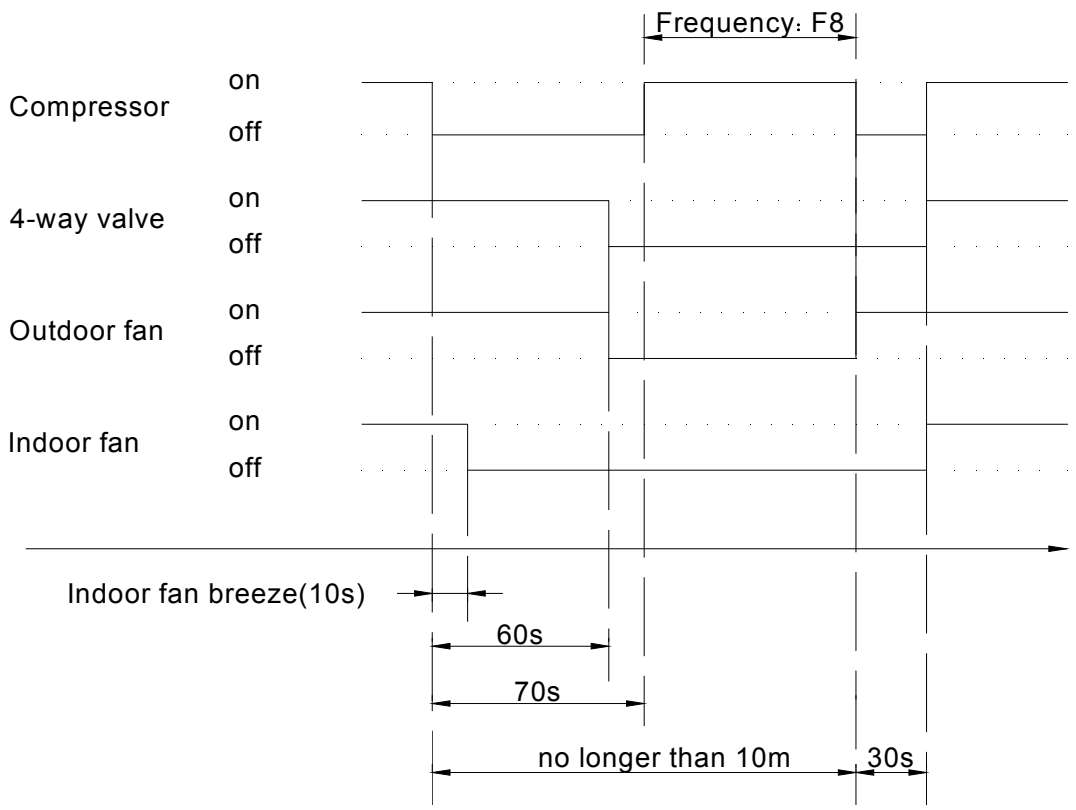

For 18K, 24K models:

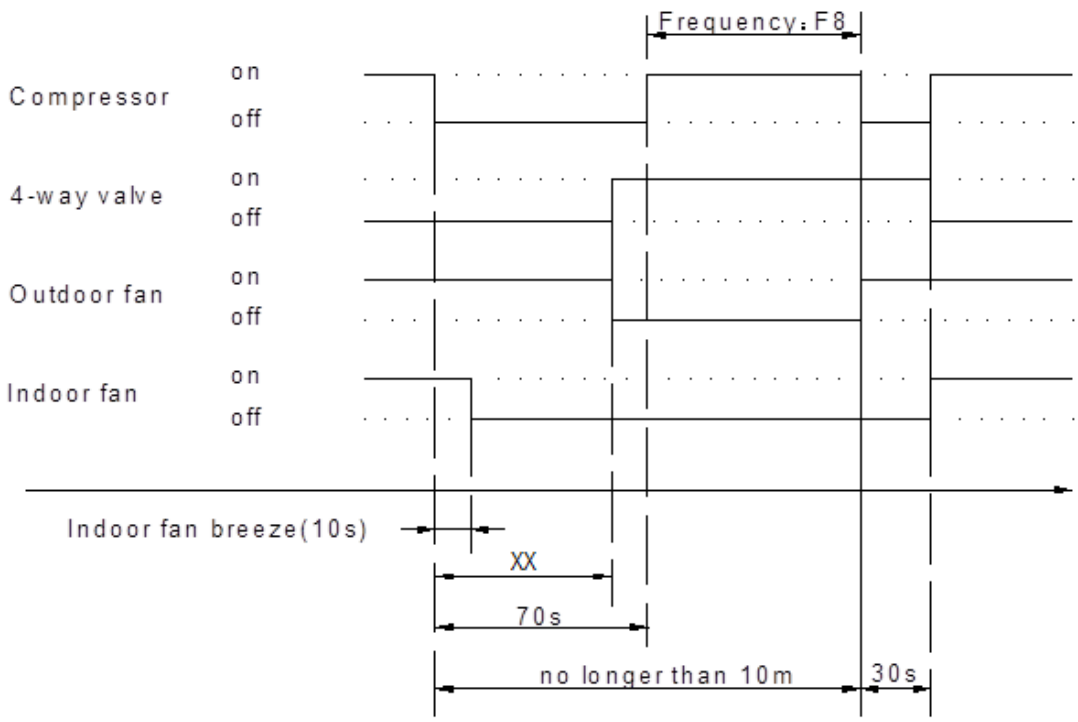

XX = 60 s for 18K models

XX = 90 s for 24K models

Все каталоги и инструкции здесь: https://splitsystema48.ru/instrukcii-po-ekspluatacii-kondicionerov.html

10.4.3.5 Evaporator coil temperature protection

----T2> TEH2℃, the compressor running frequency decreases to the lower level and runs for 20s. When the frequency decreases to F2 and the T2 is still over TEH2℃ for 3 minutes, the compressor will stop.

----T2<48℃ or T2 stays in 48℃~ TEH2℃ for 6 minutes, the frequency will not be limited by T2.

----T2>60℃, the compressor will stop and restart when T2<48℃.

While TEH2=53℃ for 9K,12K,18K mode, TEH2=55℃ for 24K model l

10.4.4 Auto-mode

This mode can be chosen with remote controller and the setting temperature can be changed between 17~30℃.

In auto mode, the machine will choose cooling, heating or fan-only mode according to ΔT (ΔT =T1-Ts).

ΔT=T1-Ts	Running mode
ΔT＞1℃	Cooling
-1<ΔT≤1℃	Fan-only
ΔT≤-1℃	Heating

Indoor fan will run at auto fan of the relevant mode.

The louver operates same as in relevant mode.

If the machine switches mode between heating and cooling, the compressor will keep stopping for 15 minutes and then choose mode according to T1-Ts.

If the setting temperature is modified, the machine will choose running function again.

10.4.5 Drying mode

10.4.5.1 Indoor fan speed is fixed at breeze and can’t be changed. The louver angle is the same as in cooling mode.

10.4.5.2 Compressor running rules

Все каталоги и инструкции здесь: https://splitsystema48.ru/instrukcii-po-ekspluatacii-kondicionerov.html

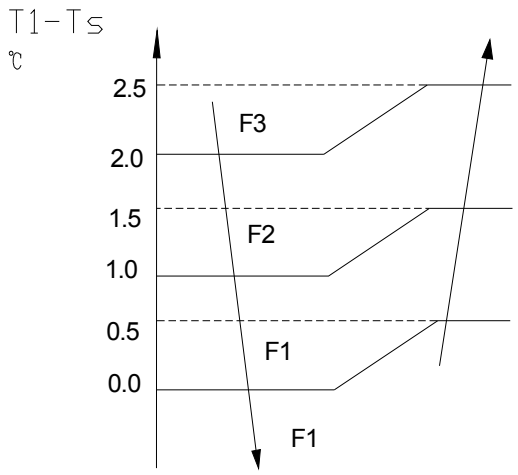

10.4.5.3 Low indoor room temperature protection

In drying mode, if room temperature is lower than 10℃, the compressor will stop and not resume until room temperature exceeds 12℃.

10.4.5.4 Evaporator anti-freezing protection, condenser high temperature protection and outdoor unit frequency limit are active and the same as that in cooling mode.

10.4.5.5 The outdoor fan operates the same as in cooling mode.

10.4.6 Forced operation function

10.4.6.1 Enter forced operation function:

When the machine is off, pressing the touch button will carry the machine to forced auto mode. After this, if pressing the button once again within 5 seconds, the machine will turn into forced cooling mode. In forced auto, forced cooling or any other operation mode, pressing touch button will turn off the machine.

10.4.6.2 In forced operation mode, all general protections and remote control are available.

10.4.6.3 Operation rules:

Forced cooling mode:

The compressor runs at F2 frequency and indoor fan runs as breeze. After running for 30 minutes. the machine will turn to auto mode as 24℃ setting temperature.

Forced auto mode:

The action of forced auto mode is the same as normal auto mode with 24℃ setting temperature.

10.4.7 Timer function

10.4.7.1 Timing range is 24 hours.

10.4.7.2 Timer on. The machine will turn on automatically when reaching the setting time.

Все каталоги и инструкции здесь: https://splitsystema48.ru/instrukcii-po-ekspluatacii-kondicionerov.html

10.4.7.3 Timer off. The machine will turn off automatically when reaching the setting time.

10.4.7.4 Timer on/off. The machine will turn on automatically when reaching the setting “on” time, and then turn off automatically when reaching the setting “off” time.

10.4.7.5 Timer off/on. The machine will turn off automatically when reaching the setting “off” time, and then turn on automatically when reaching the setting “on” time.

10.4.7.6 The timer function will not change the AC current operation mode. Suppose AC is off now, it will not start up firstly after setting the “timer off” function. And when reaching the setting time, the timer LED will be off and the AC running mode has not been changed.

10.4.7.7 The setting time is relative time.

10.4.8 Sleep function mode

10.4.8.1 Operation time in sleep mode is 7 hours. After 7 hours the AC quits this mode and turns off.

10.4.8.2. Operation process in sleep mode is as follow:

When cooling, the setting temperature rises 1℃ (be lower than 30℃) every one hour, 2 hours later the setting temperature stops rising and indoor fan is fixed as low speed.

When heating, the setting temperature decreases 1℃ (be higher than 17℃) every one hour, 2 hours later the setting temperature stops rising and indoor fan is fixed as low speed. (Anti-cold wind function has the priority)

10.4.8.3 Timer setting is available

10.4.8.4 When user uses timer off function in sleep mode (or sleep function in timer off mode), if the timing is less than 7 hours, sleep function will be cancelled when reaching the setting time. If the timing is more than 7 hours, the machine will not stop until reaches the setting time in sleep mode.

10.4.9 Auto-Restart function

The indoor unit is equipped with auto-restart function, which is carried out through an auto-restart module. In case of a sudden power failure, the module memorizes the setting conditions before the power failure. The unit will resume the previous operation setting (not including swing function) automatically after 3 minutes when power returns.

If the memorization condition is forced cooling mode, the unit will run in cooling mode for 30 minutes and turn to auto mode as 24℃ setting temp.

If AC is off before power off and AC is required to start up now, the compressor will have 1 minute

Все каталоги и инструкции здесь: https://splitsystema48.ru/instrukcii-po-ekspluatacii-kondicionerov.html

delay when power on. Other conditions, the compressor will have 3 minutes delay when restarts.

10.4.10 Louver Position Memory Function

When starting the unit again after shutting down, its louver will restore to the angle originally set by the user, but the precondition is that the angle must be within the allowable range, if it exceeds, it will memorize the maximum angle of the louver. During operation, if the power fails or the end user shuts down the unit in the turbo mode, the louver will restore to the default angle.

10.4.11 Refrigerant Leakage Detection

With this new technology, the display area will show “EC” when the outdoor unit detects refrigerant leakage.

Все каталоги и инструкции здесь: https://splitsystema48.ru/instrukcii-po-ekspluatacii-kondicionerov.html

11. Troubleshooting

11.1 Indoor Unit Error Display

Display	Operation lamp flash times	Timer lamp	Failure
E0	1	X	EEPROM error
E1	2	X	Indoor and outdoor communication error
E2	3	X	Zero crossing detection error
E3	4	X	Indoor fan speed has been out of control
E4	5	X	Indoor room temperature sensor T1 open circuit or short circuit
E5	6	X	Evaporator coil temperature sensor T2 open circuit or short circuit
EC	7	X	Refrigerant leak detection error
F1	2	O	Outdoor temperature sensor open circuit or short circuit
F2	3	O	Condenser coil temperature sensor open circuit or short circuit
F3	4	O	Compressor discharge temperature sensor open circuit or short circuit
F4	5	O	Outdoor EEPROM parameter error
P0	1	☆	IPM malfunction or IGBT over-strong current
P1	2	☆	Over voltage or too low voltage protection
P2	3	☆	Temperature protection of compressor top. (only for 24K models)
P4	5	☆	Inverter compressor drive error

O （light） X （off） ☆ （flash）

Все каталоги и инструкции здесь: https://splitsystema48.ru/instrukcii-po-ekspluatacii-kondicionerov.html

11.2 Diagnosis and Solution

11.2.1 EEPROM parameter error diagnosis and solution

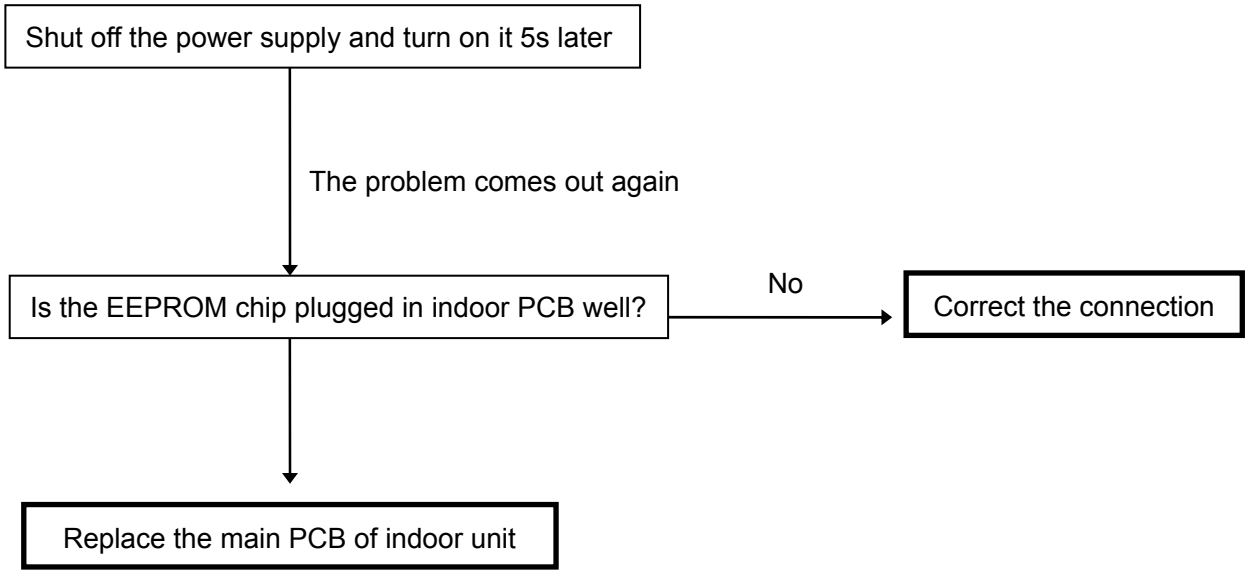

Все каталоги и инструкции здесь: https://splitsystema48.ru/instrukcii-po-ekspluatacii-kondicionerov.html

11.2.2 Indoor / outdoor unit's communication error

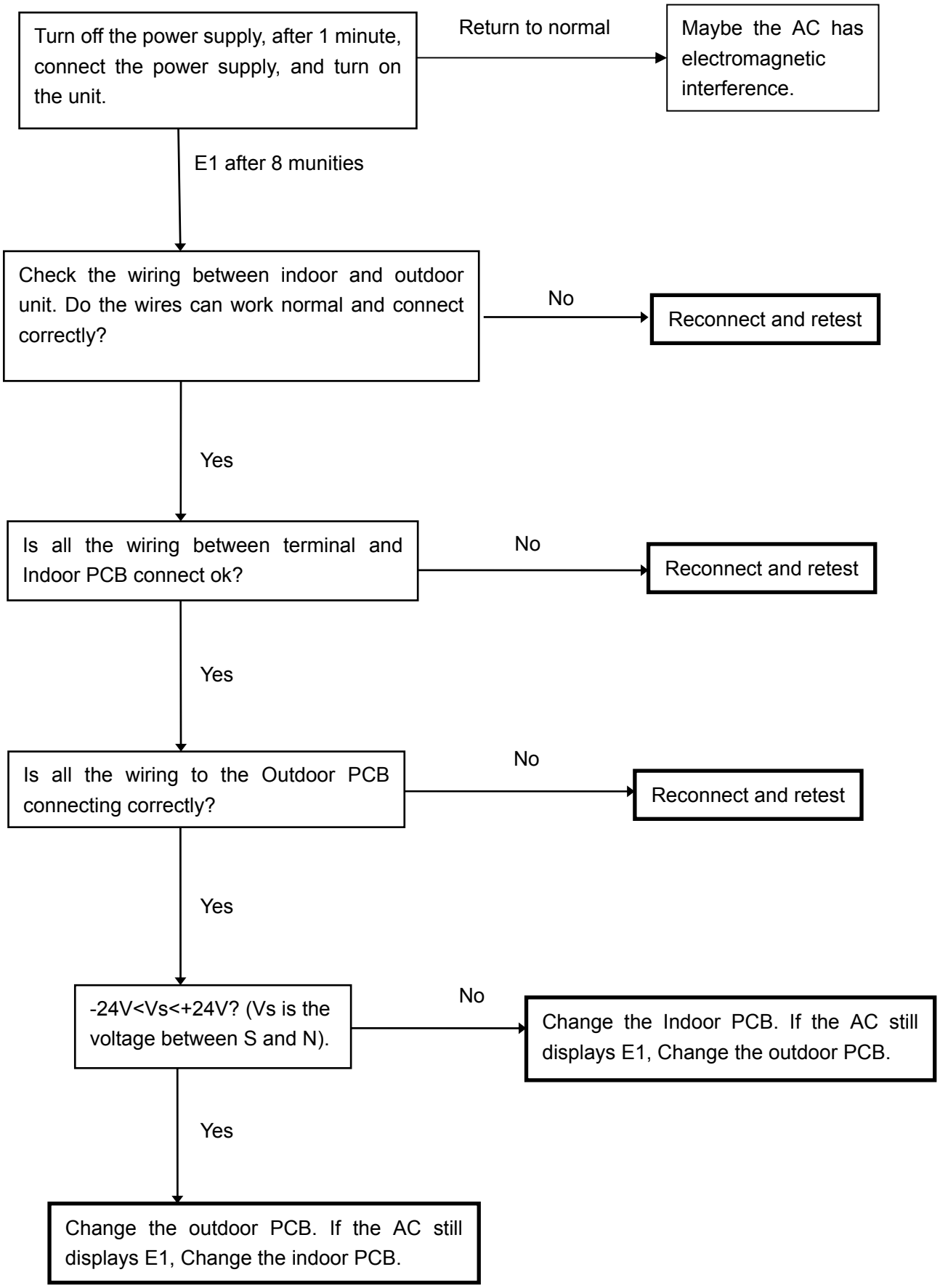

Все каталоги и инструкции здесь: https://splitsystema48.ru/instrukcii-po-ekspluatacii-kondicionerov.html

11.2.3 Fan speed has been out of control diagnosis

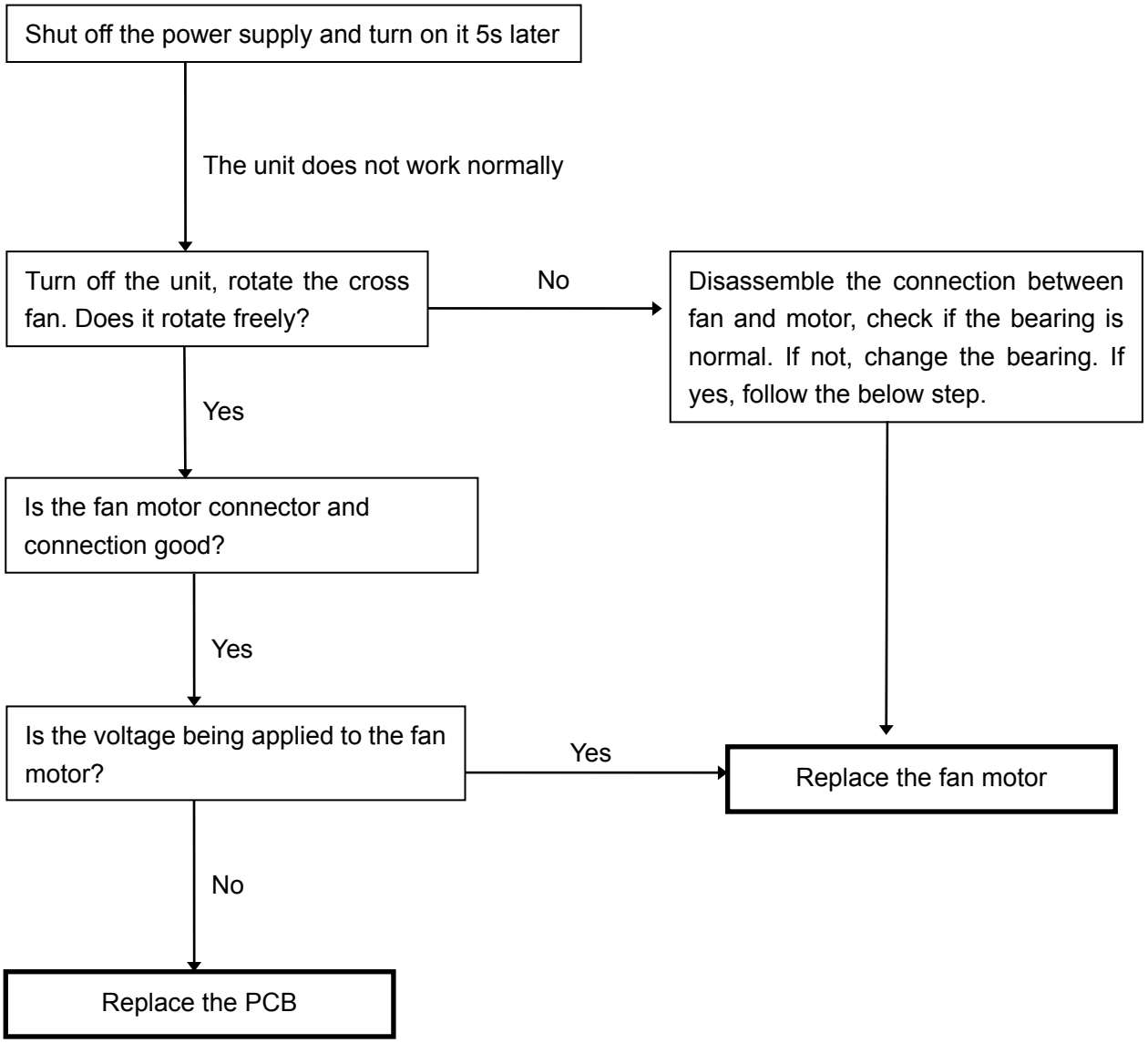

11.2.4 Open or short circuit of temperature sensor diagnosis and solution

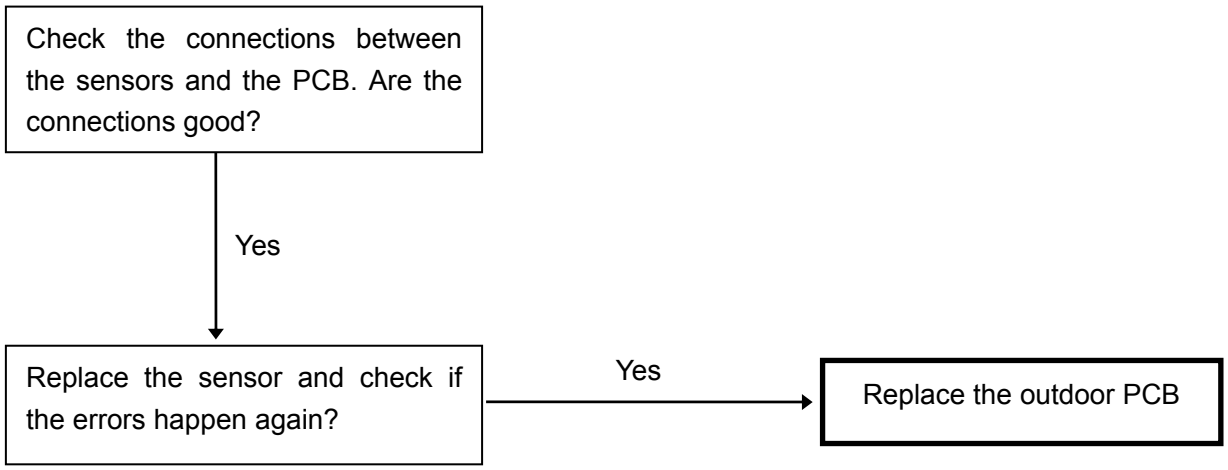

Все каталоги и инструкции здесь: https://splitsystema48.ru/instrukcii-po-ekspluatacii-kondicionerov.html

11.2.5 IGBT over-strong current protection diagnosis and solution

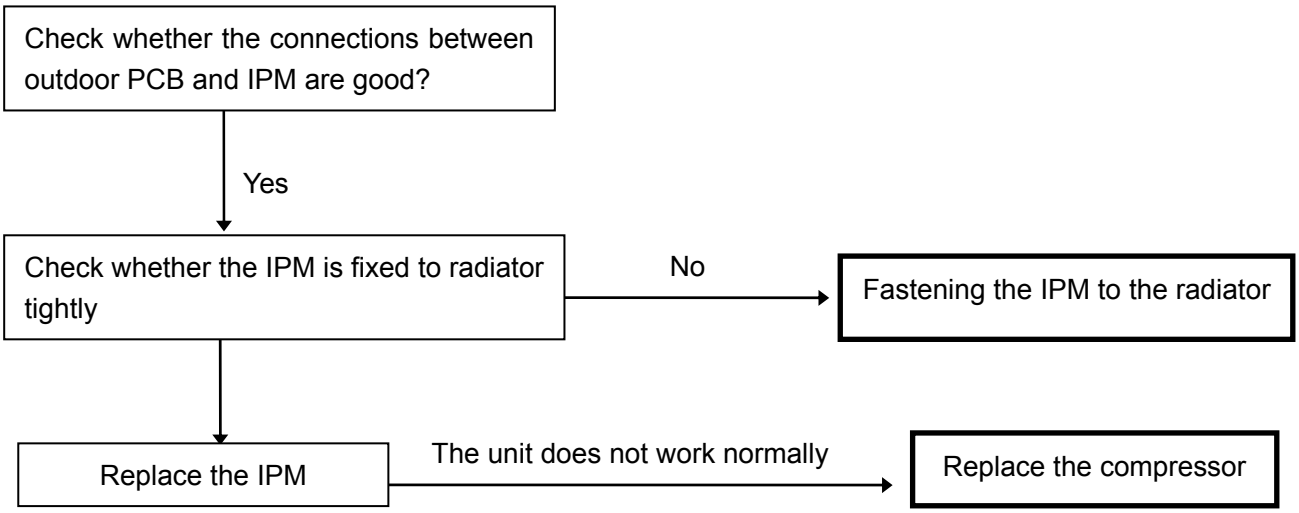

11.2.6 Over voltage or too low voltage protection diagnosis and solution

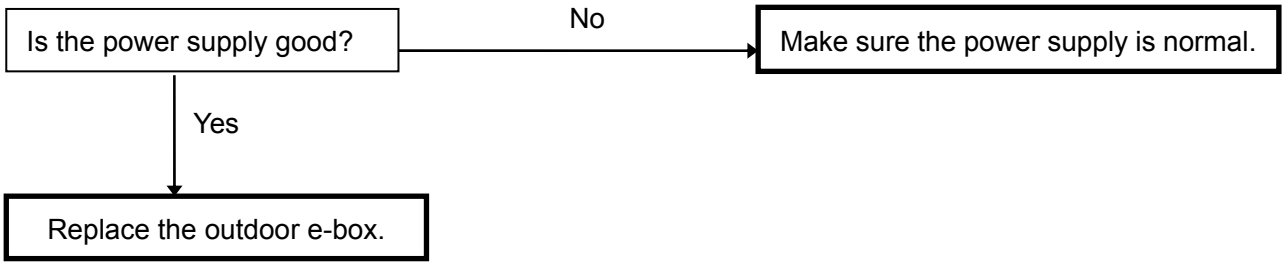

11.2.7 High temperature protection of compressor top diagnosis and solution

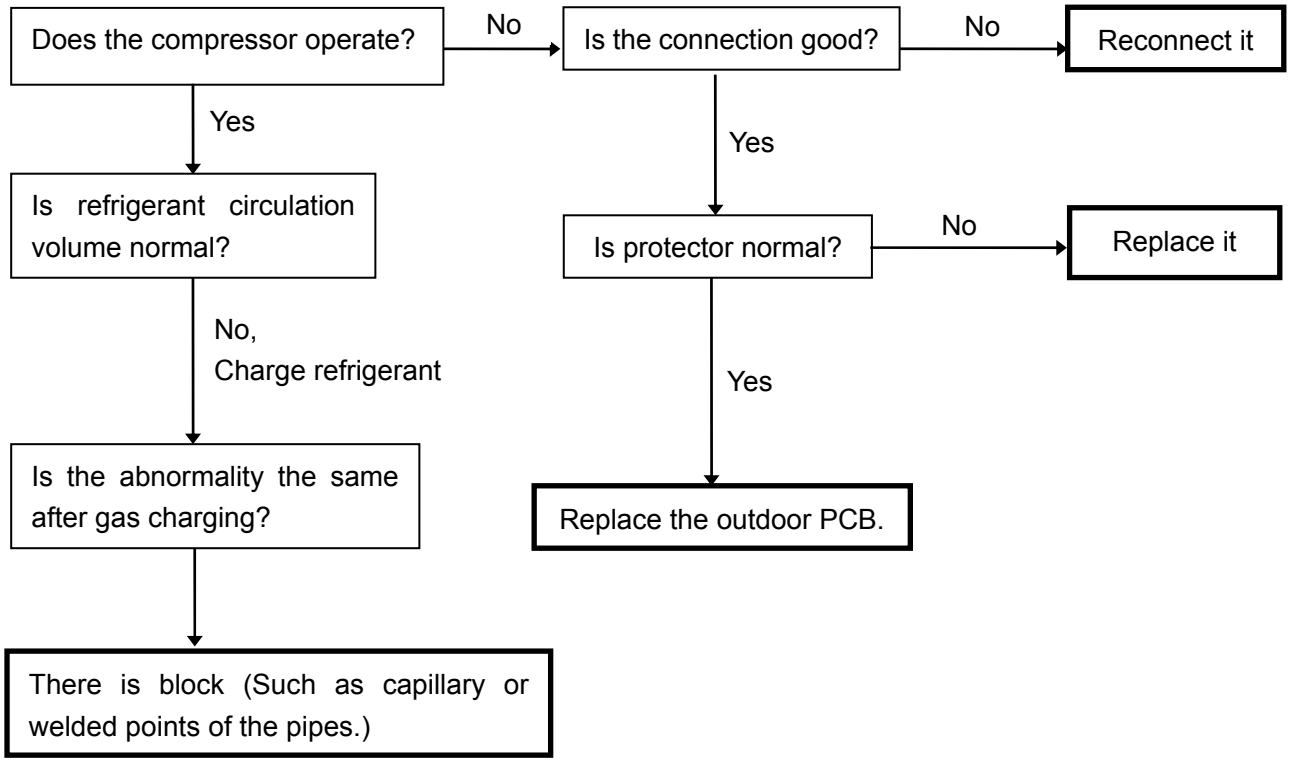

Все каталоги и инструкции здесь: https://splitsystema48.ru/instrukcii-po-ekspluatacii-kondicionerov.html

11.2.8 Inverter compressor drive error diagnosis and solution

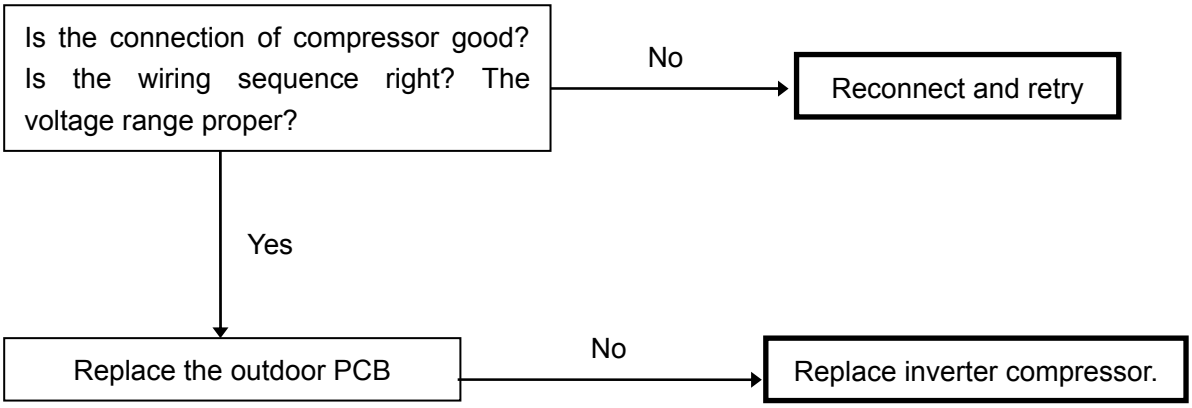

11.2.9 Zero crossing detection error

This is alarm signal when the main chip can't detect over-zero signal. When such failure occurs, the main control board must have fault.

11.2.10 Refrigerant Leakage Detection

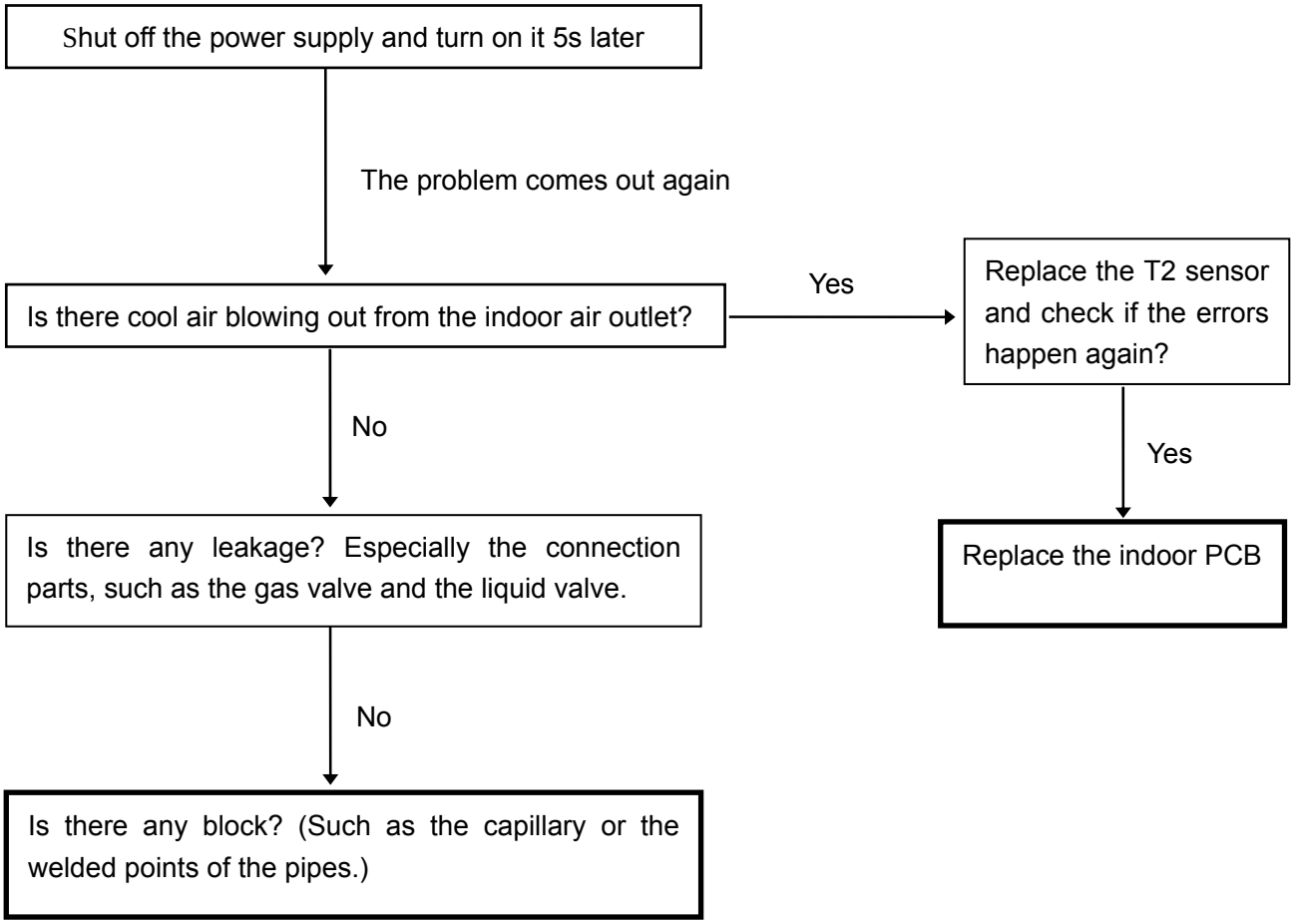

splitoff.ru
Большая библиотека технической документации
https://splitsystema48.ru/instrukcii-po-ekspluatacii-kondicionerov.html
каталоги, инструкции, сервисные мануалы, схемы.